FEATURES

Equipment Stands

- Heavy-Duty, solid adjustable shelves 400 lb. capacity per shelf
- Smooth, solid surface easy to clean
- Easy lock bushing assembly
- Ships knock down UPS

Optional

Swivel casters (CV)
Locking casters (CL)
Heavy-Duty swivel Casters (CHV)
Heavy-Duty locking Casters (CHL)
Tops provide a flat surface:
Aluminum and stainless (AT ST)
Bumpers (B)

ASK US ABOUT OUR CASTER UPGRADE OPTIONS AVAILABLE WHEN ORDERING

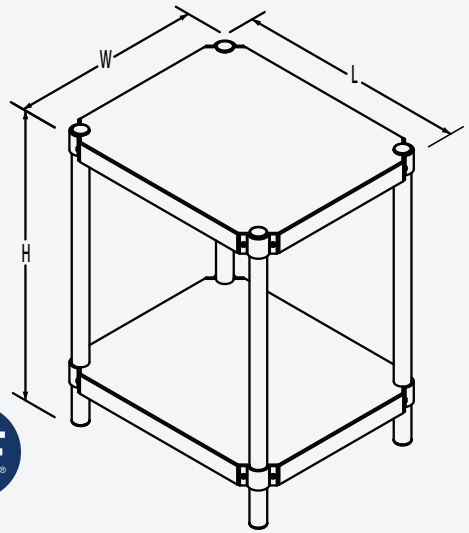

NSF



A182424-2

Equipment Stands		
Model Number	**Size W x H x L**	**Weight**
A182424-2	18" x 24" x 24"	15
A183024-2	18" x 30" x 24"	16
A182436-2	18" x 24" x 36"	20
A183036-2	18" x 30" x 36"	21
A202424-2	20" x 24" x 24"	17
A203024-2	20" x 30" x 24"	18
A202436-2	20" x 24" x 36"	23

Equipment Stands		
Model Number	**Size W x H x L**	**Weight**
A203036-2	20" x 30" x 36"	24
A242424-2	24" x 24" x 24"	19
A243024-2	24" x 30" x 24"	20
A242430-2	24" x 24" x 30"	22
A243030-2	24" x 30" x 30"	23
A242436-2	24" x 24" x 36"	25
A243036-2	24" x 30" x 36"	26

MADE IN USA