PVI MANUFACTURING

ONTRAC RAMP ASSEMBLY MANUAL

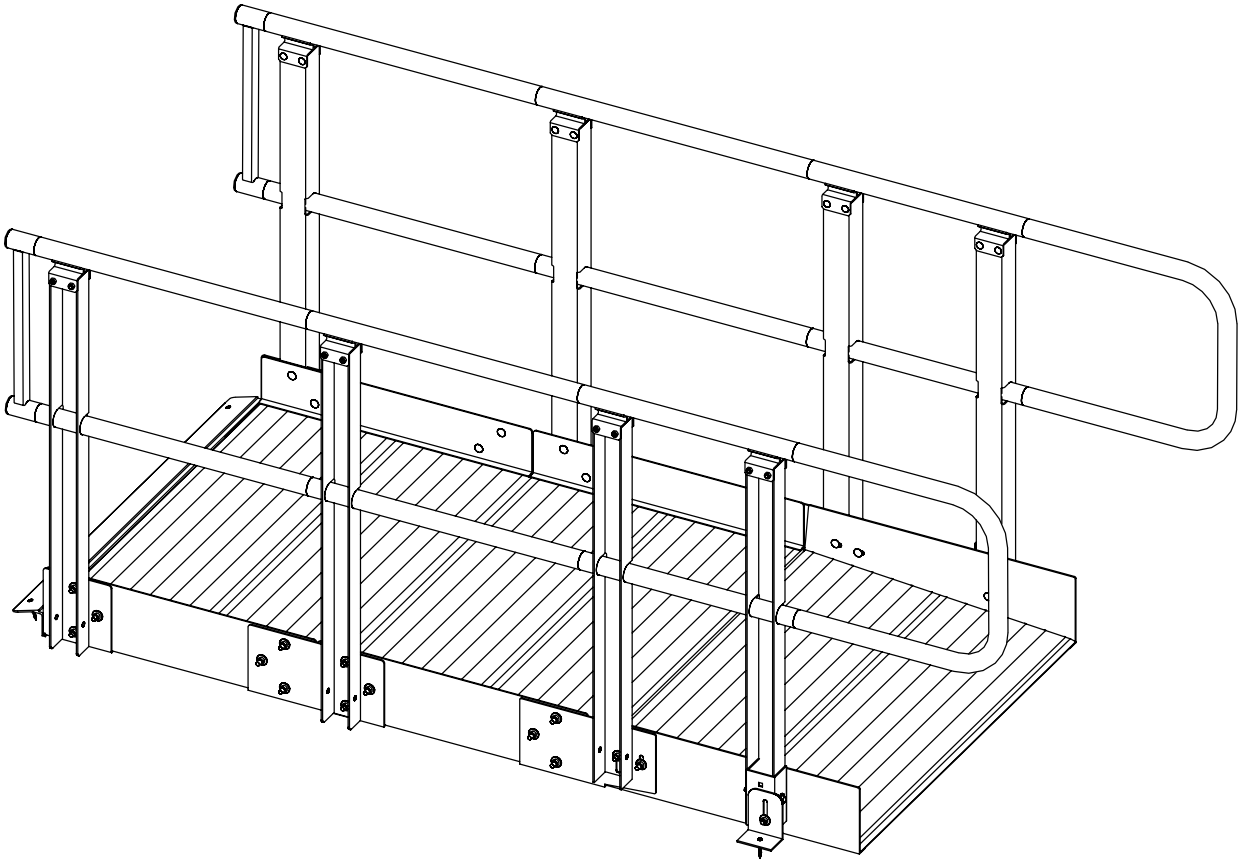

PVI Manufacturing Phone: 800-554-7267 | Email: info@pvimanufacturing.com | www.pvimanufacturing.com

OVERVIEW

APPEARANCE: The PVI ONTRAC Ramp with handrail has a clean uncluttered appearance that will fit in most surroundings.

LOW MAINTENANCE: All aluminum design has lifetime durability in all kinds of climates without periodic painting or renewal of preservatives. The aluminum alloys used are resistant to salt corrosion (noncorrosive or pet safe salt is recommended). The ONTRAC Ramp may even be used in coastal areas and cold climates that require the use of deicers.

SEMI PERMANENT: The PVI ONTRAC Ramp serves the purpose as well or better than a permanent concrete ramp but can still go along with the user if they move or can be removed and resold when no longer needed. The PVI ONTRAC Ramp is designed to be freestanding and completely independent of the existing structure it serves. In most cases this simplifies compliance with local codes and may eliminate the requirement for a permit.

FLEXIBLE COMPONENTS: If or when the PVI ONTRAC Ramp is moved it is easy to add or subtract from in a new location. This feature makes the PVI ONTRAC Ramp attractive for lease/rental opportunities that may be available with insurance companies serving rehabilitation needs.

EASY INSTALLATION: The components of the PVI ONTRAC Ramp are designed to provide an easy assembly method, with simple/common hand tools and set in to place without the need for heavy equipment. A van, pickup, or small trailer is all that is needed to transport the PVI ONTRAC Ramp to the job site.

SHIPPING: The PVI ONTRAC Ramp components are stocked and warehoused so in most cases an order can be quickly filled and shipped. The lightweight aluminum design and plant location make it economical to ship to any part of the country.

RAMP SPECS
USABLE WIDTH: 36”
OVERALL WIDTH: 42”
RAMP SURFACE: Aluminum planking with lateral grooves.
CURBING: 4” high standard curb.
SLOPE: Adjustable from 1on12 to 2on12.

LAYOUT CONSIDERATIONS

NOTE: ADA COMPLIANCE IS USUALLY OPTIONAL *(guideline only)* **FOR RESIDENTIAL APPLICATIONS.**

SLOPES: The ADA recommends a slope of 1on12 (1 foot of ramp per 1 inch of rise) when possible. However, when space is limited or other considerations require a steeper ramp, the PVI ONTRAC Ramp will accommodate slopes up to 2on12 (1 foot of ramp per 2 inches of rise). When selecting the slope of the ramp the capabilities and safety of the users and their equipment must be considered.

HANDRAIL: The ADA requires handrail on any ramp with a rise of 6” or more. All PVI ONTRAC Ramps require handrails. PVI ONTRAC Ramps will not be sold without handrails for safety reasons as well as the overall design integrity of the ramp.

NOTE: DURING ASSEMBLY DO NOT TIGHTEN HARDWARE ALL OF THE WAY UNTIL ASSEMBLY IS COMPLETE.

FOOTING AND ANCHORING: The PVI ONTRAC Ramp is designed to be a freestanding, independent structure that does not have to be permanently attached to the building it serves. Each freestanding ramp must be anchored at the upper and lower end. Anchoring may consist of lag screw or bolts into existing concrete, precast pads, patio pavers or poured in place.

ONTRAC COMPONENTS

TOOLS

- RATCHET
- 1/2" DEEP WELL SOCKET
- 7/16" SOCKET
- 1/2" WRENCH
- 1/4" MASONRY BIT
- 5/32" ALLEN WRENCH
- #2 PHILLIPS DRILL BIT
- TAPE MEASURE

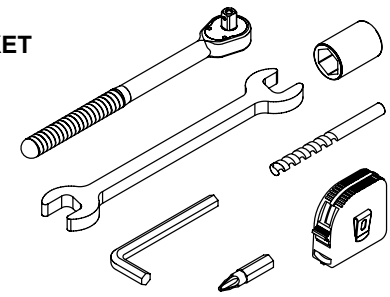

HARDWARE

- 5/16 x 1 CARRIAGE BOLTS
- 5/16 x 3 1/4 HEX BOLTS
- 1/4 x 2 1/2 CARRIAGE BOLTS
- 1/4 SELFLOCK NUTS
- 1/4 x 1 1/4 CONCRETE SCREWS
- 5/16 SELFLOCK NUTS
- 5/16 WASHERS
- HANDRAIL SPLICE
- SUPPORT BRACKETS

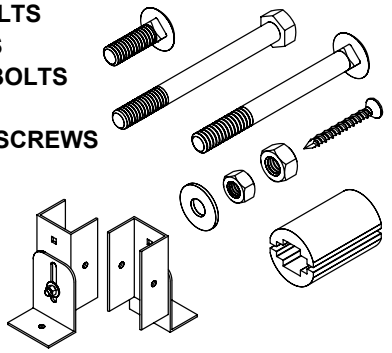

RAMP BASE

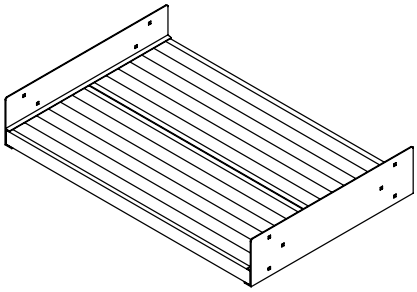

ENTRANCE BASE

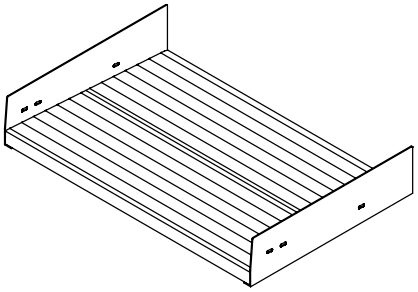

HOOK BRACKET

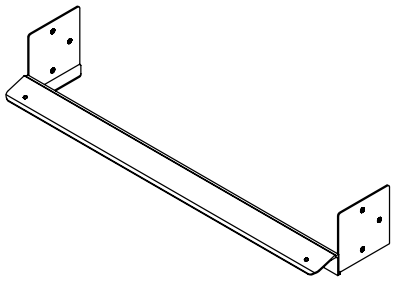

RAMP SPLICE

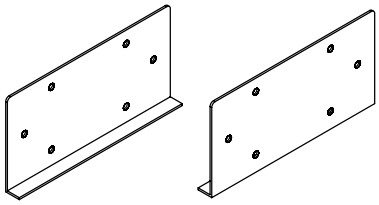

ENTRANCE SPLICE *(LEFT &RIGHT)*

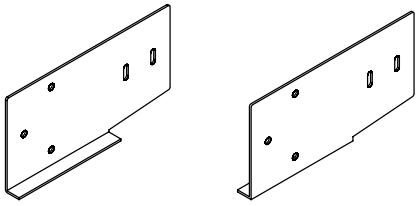

END LOOPS

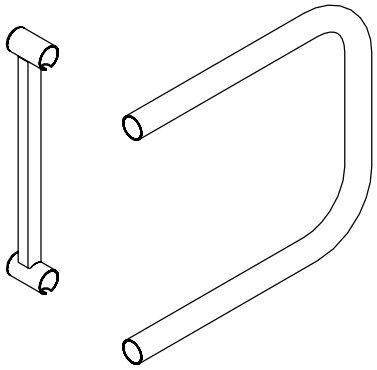

POST

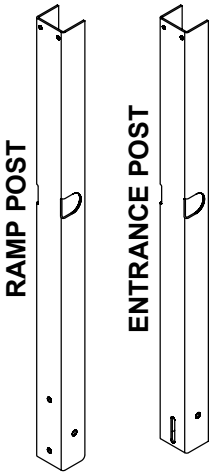

TOP HANDRAIL

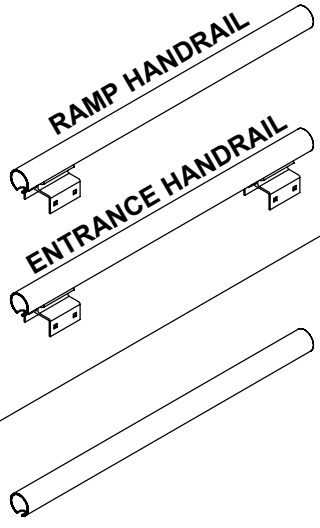

BOTTOM HANDRAIL TUBE

RAMP HANDRAIL *(LEFT &RIGHT)*

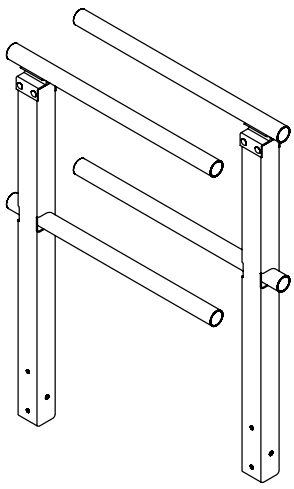

ENTRANCE HANDRAIL

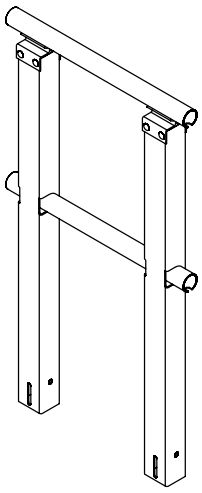

HANDRAIL ASSEMBLY 1.0: Ramp sections will require one left and one right handrail assembly of the corresponding length. **(Fig.A)** The components are symmetrical and will need to be assembled as left and right pairs. Assemble handrail by placing the post cap of the top ramp handrail over the ramp post. Align holes and insert the ¼ x 2 ½ carriage bolts with the head of the bolts on the inside of the handrail assembly and fasten with ¼ selflock nuts. **(Fig.B)**

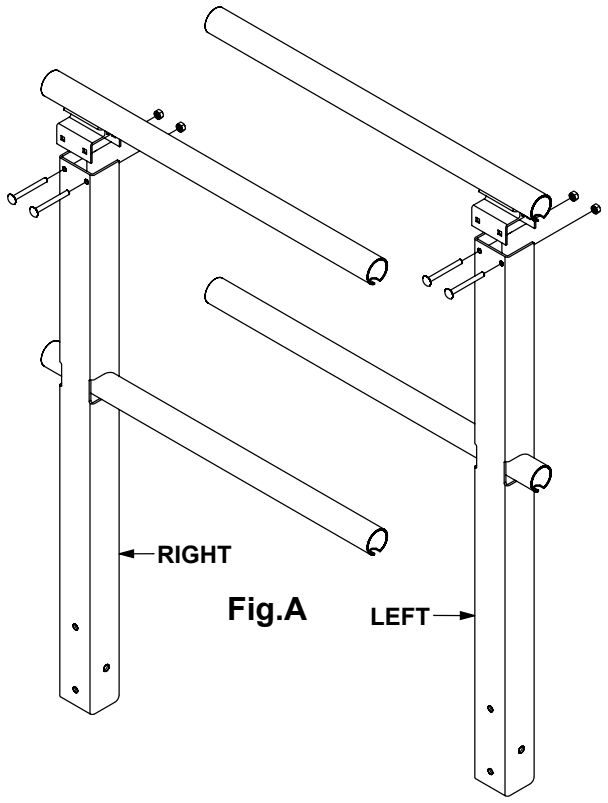

Fig.A

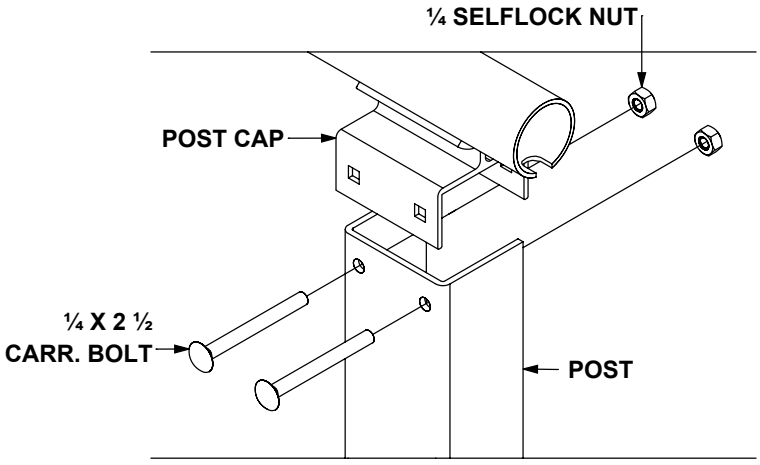

Fig.B

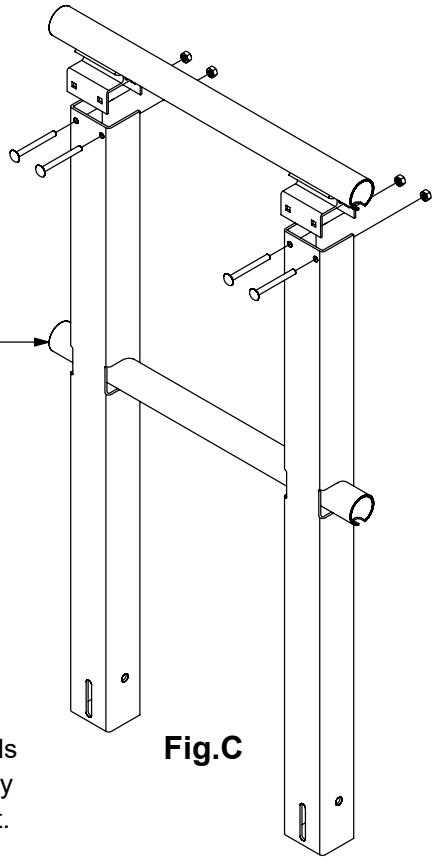

Fig.C

HANDRAIL ASSEMBLY 1.1: Each ramp will require two entrance handrail assemblies at the entrance location. **(Fig.C)** Entrance handrails are assembled using two entrance post. Assemble entrance handrail by placing the post cap of the top entrance handrail over the entrance post. Align holes and insert the ¼ x 2 ½ carriage bolts with the head of the bolts on the inside of the handrail assembly and fasten with ¼ selflock nuts. **(Fig.B)**

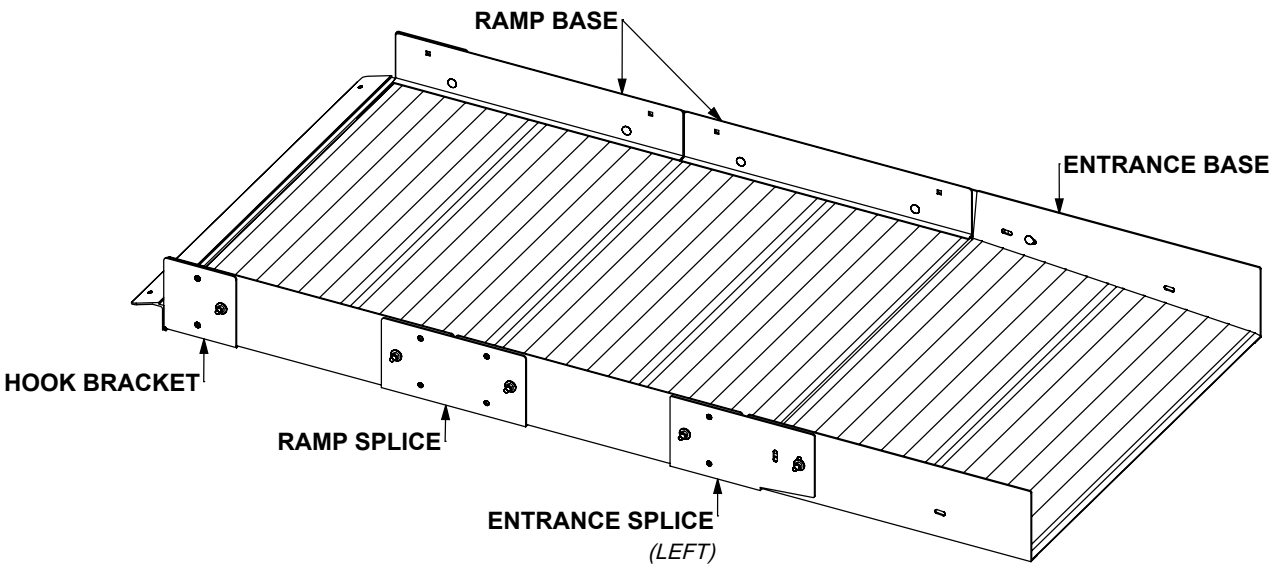

RAMP BASE ASSEMBLY 2.0: Connect ramp bases together using a ramp splice. **(Fig. D)** Attach ramp splice using the single/outside hole locations of the ramp splice and ramp base with 5/16 x 1 carriage bolts, washers, and selflock nuts.

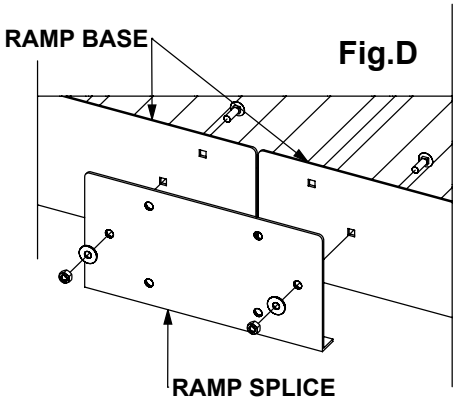

Fig.D

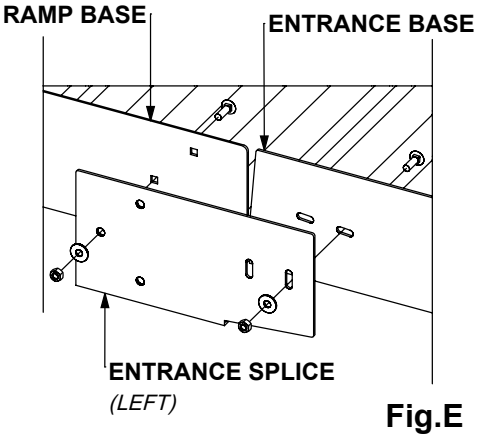

Fig.E

RAMP BASE ASSEMBLY 2.1: Connect entrance base to ramp using a left and right entrance splice. **(Fig. E)** Attach entrance splice with 5/16 x1 carriage bolts, washers, and selflock nuts using the slotted hole in the entrance base and the outer slotted hole in the entrance splice, and the single/outside hole in the ramp splice and ramp base.

Fig.F

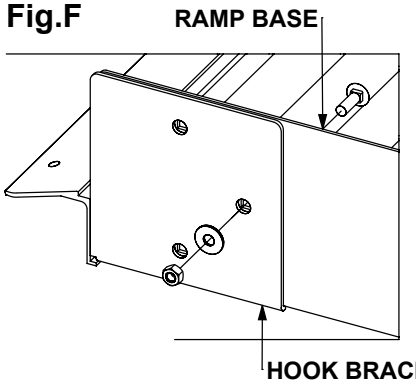

RAMP BASE ASSEMBLY 2.2: Connect the hook bracket at the top end of the ramp with 5/16 x 1 carriage bolts, washers, and selflock nuts. **(Fig. F)**

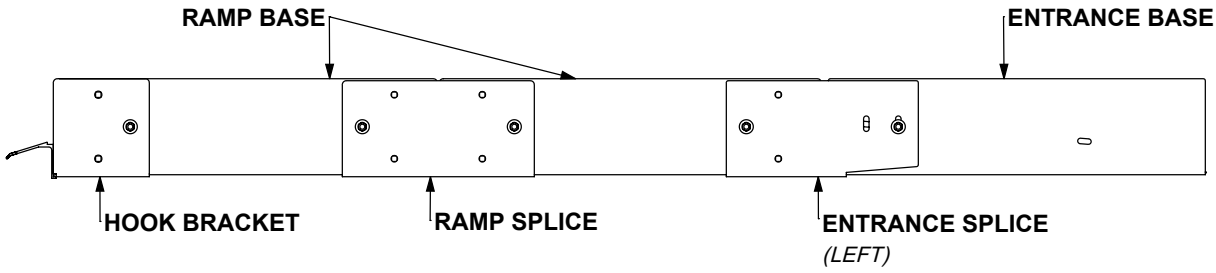

HANDRAIL INSTALLATION 3.0: Start handrail installation by installing the entrance handrail. Attach the post of the entrance handrail assembly to the entrance base with a 5/16 x 1 carriage bolt, washer, and selflock nut using the slotted holes in the post and base. **(Fig. G)** At the second post location place a 5/16 x 1 carriage bolt through the slotted hole of entrance base, entrance splice, and entrance post and fasten with a washer and selflock nut. **(Fig.H)** Do not tighten hardware all the way until all handrail has been installed.

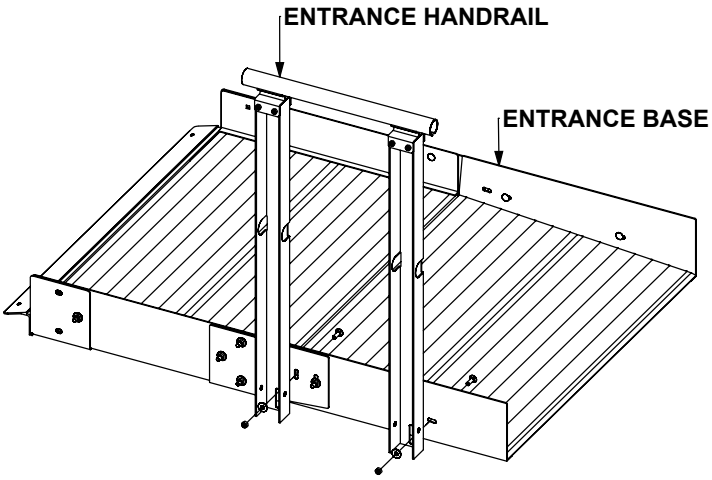

Fig.H

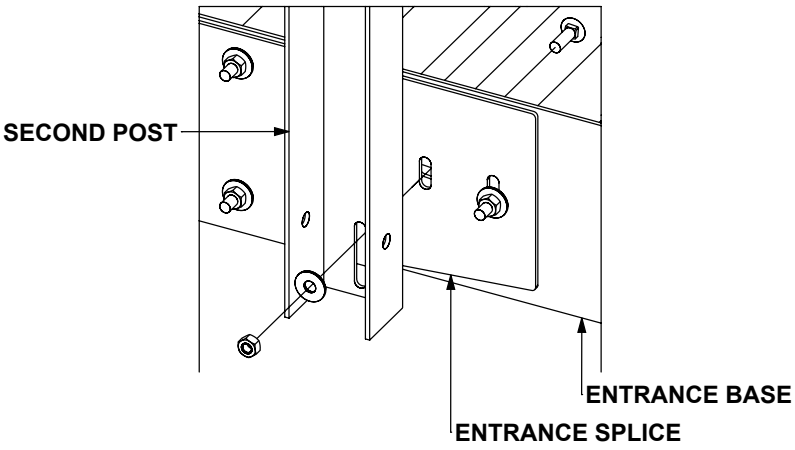

Fig.G

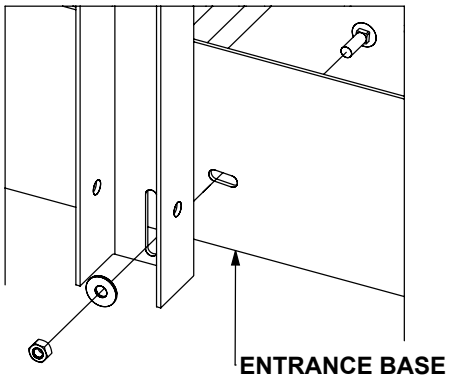

HANDRAIL INSTALLATION 3.1: Next install the ramp handrail by first inserting a handrail splice inside of the already installed top tube of the entrance handrail, **(Fig. I)** place the tube of the ramp handrail over the handrail splice and attach handrail to base by placing a 5/16 x 1 carriage bolts through the ramp base, ramp splice/hook bracket, and ramp post and fasten with washers and selflock nuts. **(Fig. J)**

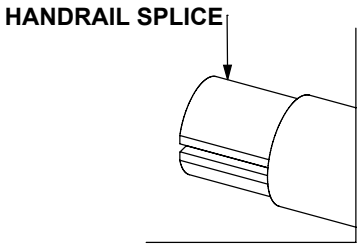

Fig.I

Fig.J

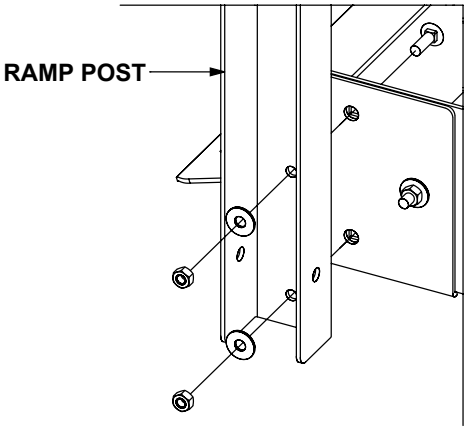

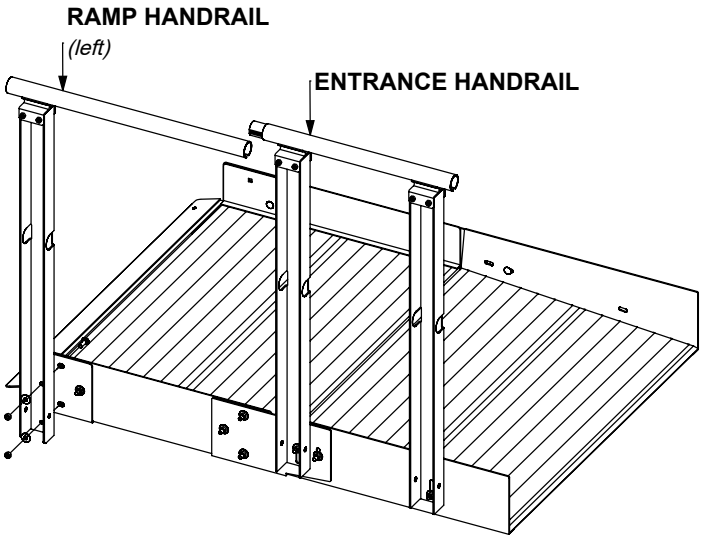

HANDRAIL INSTALLATION 3.2: Insert lower handrail tubes through the holes in the handrail post so they are even with the top handrail tube and fasten with handrail splice. **(Fig. K)** Attach end loops at each end of ramp handrail run using a handrail splice at the top and bottom tube location. **(Fig. L)**

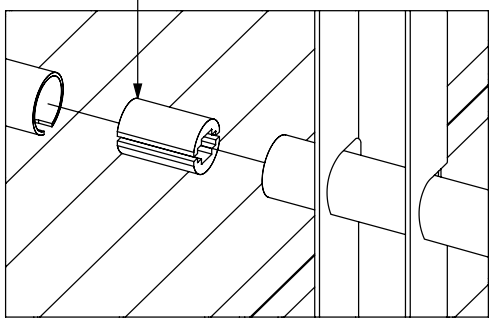

Fig.K

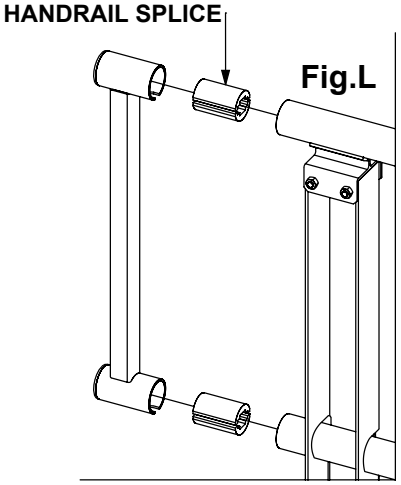

Fig.L

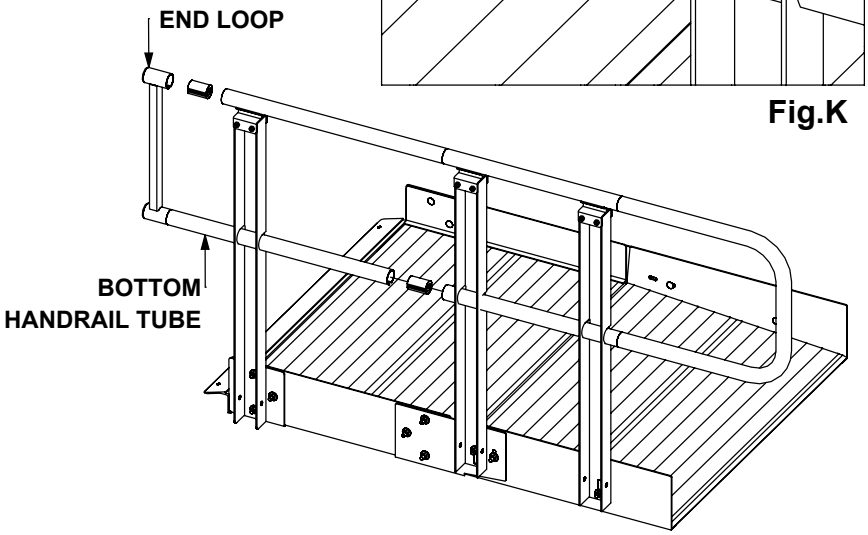

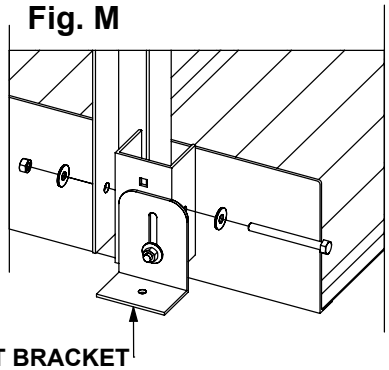

Fig. M

SUPPORT BRACKET ASSEMBLY 4.0: Attach support brackets by placing the support bracket channel over the entrance post and attach with 5/16 x 3 ¼ hex bolt, flat washers, and a selflock nut. **(Fig. M)** To adjust the height, loosen the selflock nut on the front side of the support bracket assembly, once height is set re-tighten selflock nut.

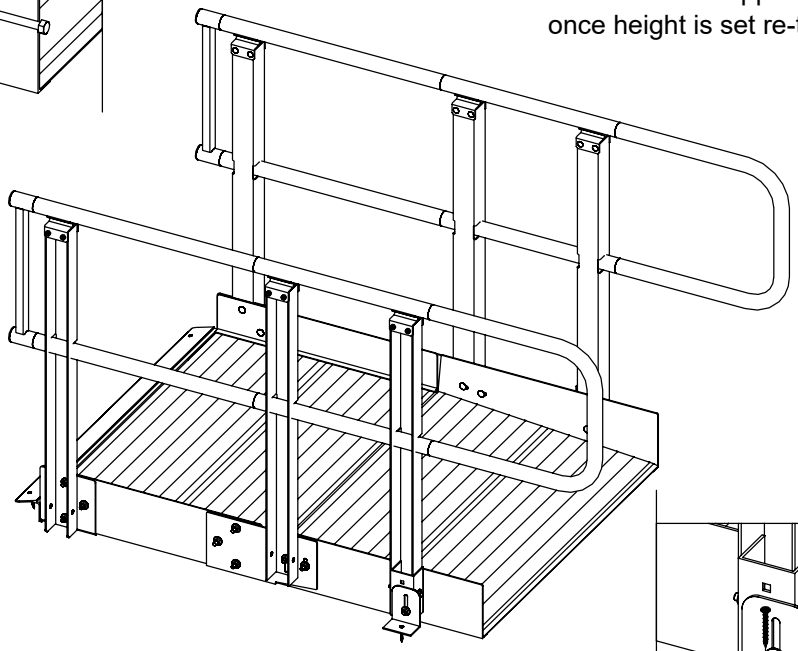

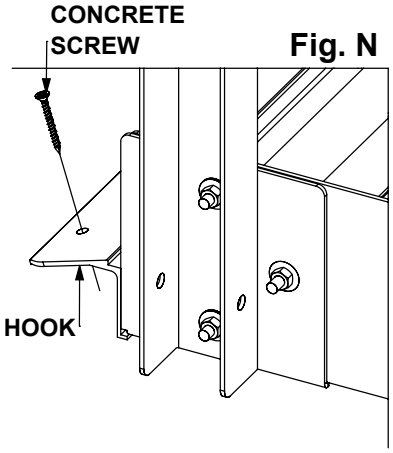

Fig. N

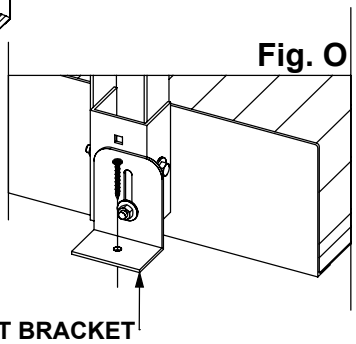

Fig. O

FINAL RAMP PLACEMENT 5.0: Place ramp in the final resting position and anchor to the ground using the supplied concrete screws. At the top end of the ramp place concrete screw through the pre-drilled holes in the ramp hook **(Fig. N)**, at the bottom end of the ramp use the holes in the support bracket angles to anchor the bottom end of the ramp to the ground. **(Fig. O)**

PVI MANUFACTURING LIMITED WARRANTY

1. LIMITED LIFETIME WARRANTY-THE FOLLOWING APPLIES TO ALL END PURCHASERS OTHER THAN RESIDENTS OF THE STATE OF CALIFORNIA*:

PVI MANUFACTURING warrants to the original end purchaser of the product is free from defects in material and workmanship under normal use and service. This warranty does not apply to any product that has been subject to misuse, abuse, neglect, alteration, accident, usage not in accordance with the product instructions, acts of God, or improper installation or that has been used for rental purposes or repaired by someone other than PVI MANUFACTURING. This warranty does not cover normal deterioration of the product due to wear and exposure.

*(FIVE YEAR WARRANTY-FOLLOWING APPLIES TO RESIDENTS OF THE STATE OF CALIFORNIA: For a period of five years after the purchase of the product by the original end purchaser of the product, PVI MANUFACTURING warrants to the original end purchaser of the product that the product is free from defects in material and workmanship under normal use and service. This warranty does not apply to any product that has been subject to misuse, abuse, neglect, alteration, accident, usage not in accordance with product instructions, acts of God, or improper installation or that has been used for rental purposes or repaired by someone other than PVI MANUFACTURING. This warranty does not cover normal deterioration of the product due to wear and exposure.)

2. This warranty is limited to repairing or replacing, at the option of PVI MANUFACTURING, any product that is returned to PVI MANUFACTURING and is reasonably determined by PVI MANUFACTURING to be defective. The repair or replacement of a defective product under this warranty will be made by PVI MANUFACTURING without charge of parts or labor. This excludes shipping or delivery charges to and from PVI MANUFACTURING'S place of business. If the product has been discontinued, PVI MANUFACTURING may replace the product with a new product of comparable value and function. PVI MANUFACTURING also reserve the right to refund the purchase price its exclusive warranty remedy.

3. Any claim alleging that the product fails to conform to this warranty may be made only by the original end purchaser and only while such purchaser owns the product. A defective product that is covered by this warranty must be returned, at the purchaser's expense, along with proof of dated of original purchase (such as receipt, check or other document PVI MANUFACTURING deems acceptable that shows the date of purchase and the identity of the product purchaser), along with a description of the alleged defect, to PVI MANUFACTURING, 2620 Industrial Drive, Fairbury, Nebraska 68352.

4. EXCEPT AS SET FORTH HEREIN, PVI MANUFACTURING MAKES NO WARRANTIES, EXPRESSED OR IMPLIED, AND PVI MANUFACTURING DISCLAIMS AND NEGATES ALL OTHER WARRANTIES, INCLUDING WITHOUT LIMITATION, IMPLIED WARRANTIES OF MERCHANTABILITY, FITNESS FOR ANY PARTICULAR PURPOSE, CONFORMITY TO MODELS OR SAMPLES, OR ANY WARRANTIES OR ANY WARRANTIES OR ANY WARRANTIES OR INDEMNITIES AGAINST INTELLECTUAL PROPERTY INFRINGEMENT.

SOME STATES DO NOT ALLOW LIMITATIONS ON IMPLIED WARRANTIES, SO THESE LIMITATIONS MAY NOT APPLY TO YOU. IN NO EVENT WILL PVI MANUFACTURING BE LIABLE FOR ANY INDIRECT, SPECIAL, INCIDENTAL, OR CONSEQUENTIAL DAMAGES OR FOR ANY LIABILITY MORE THAN THE PURCHASE PRICE OF THE PRODUCT.

5. Before using the product, the purchaser must first determine the suitability of the product for its intended use, and the purchaser assumes all risk and liability whatsoever in connection there with.

6. No person, agent, distributor, dealer or company is authorized to change, amend or modify the terms of this warranty.

7. This warranty gives the purchaser specific legal rights, and the purchaser may also have other rights that vary from state to state.

8. The purchaser may not assign the purchaser's rights or obligations under this warranty without the prior written consent of PVI MANUFACTURING.