PVI MANUFACTURING

MODULAR ANGLE WEDGE LANDING

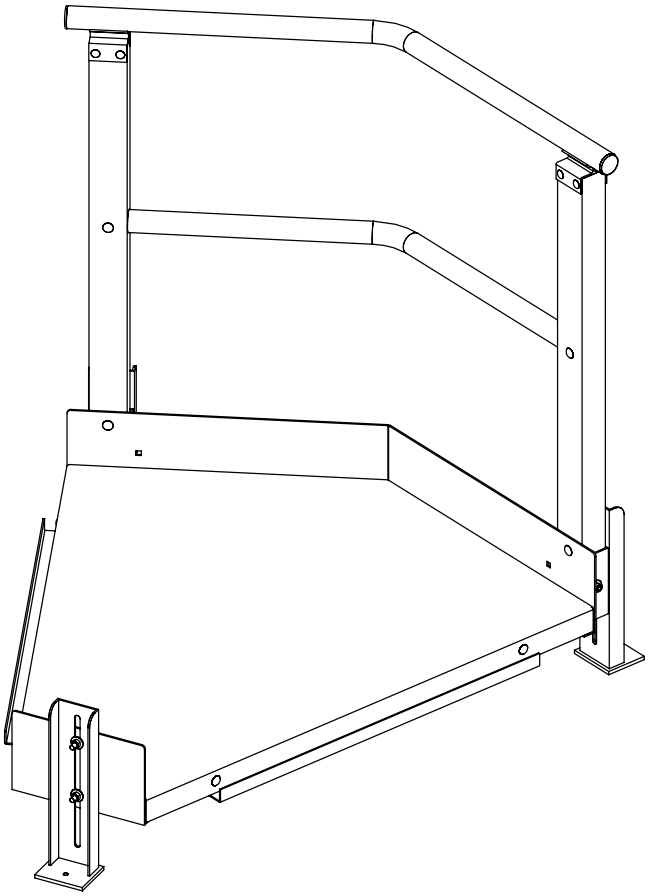

PVI Manufacturing Phone: 800-554-7267 | Email: info@pvimanufacturing.com | www.pvimanufacturing.com

OVERVIEW

APPEARANCE: The PVI Modular Angle Wedge Landing with handrail has a clean uncluttered appearance that will fit in most surroundings.

LOW MAINTENANCE: All aluminum design has lifetime durability in all kinds of climates without periodic painting or renewal of preservatives. The aluminum alloys used are resistant to salt corrosion (noncorrosive or pet safe salt is recommended). The modular stair system may even be used in coastal areas and cold climates that require the use of deicers.

SEMI PERMANENT: The PVI Modular Angle Wedge Landing serves the purpose as well or better than a permanent concrete/wooden stair, but can still go along with the user if they move, or can be removed and resold when no longer needed. The PVI Modular Angle Wedge Landing is designed to be freestanding and completely independent of the existing structure. In most cases this simplifies compliance with local codes and may eliminate the requirement for a permit.

EASY INSTALLATION: The components of the PVI Modular Angle Wedge Landing are designed to be quickly and easily assembled with simple/common hand tools and set into place without the need for heavy construction equipment. A van, pickup, or small trailer is all that is needed to transport the Angle Wedge Landing components to the job site.

SHIPPING: The PVI Modular Angle Wedge Landing components are stocked and warehoused so in most cases an order can be quickly filled and shipped. The lightweight aluminum design and plant location make it economical to ship to any part of the country.

COMPONENTS:

BASE FOOTPRINT
30°BASE - 30"x41"
45°BASE - 39"x44"
60°BASE - 48"x48"

BASE SURFACE: Anit-slip, high traction surface
CURBING: 4" high ADA standard curb.
USABLE WIDTH:38" OPENING
LOAD CAPACITY: 100 lb./sq. ft.

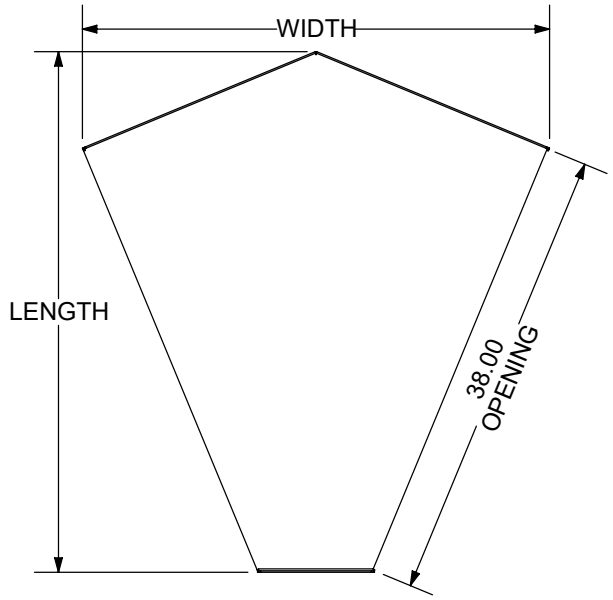

TOOLS REQUIRED
- RACHET
- 1/2" WRENCH
- 1/2" DEEP WELL SOCKET
- 7/16" SOCKET
- TAPE MEASURE
- BUBBLE LEVEL

ANGLE WEDGE LANDING PARTS

BASE

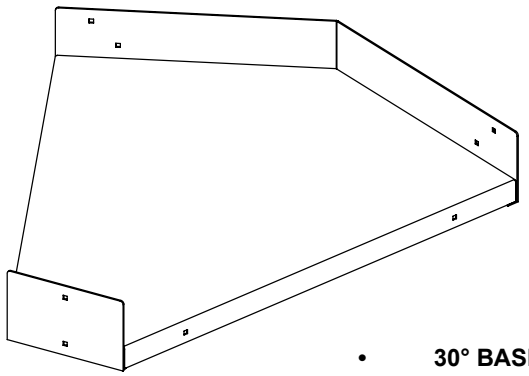

- 30° BASE
- 45° BASE
- 60° BASE

HANDRAIL

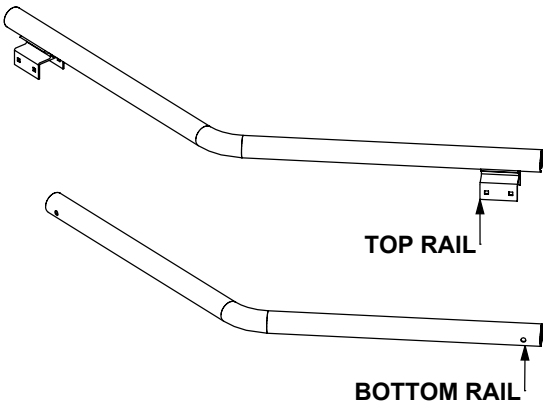

HANDRAIL POST *(LEFT/RIGHT)*

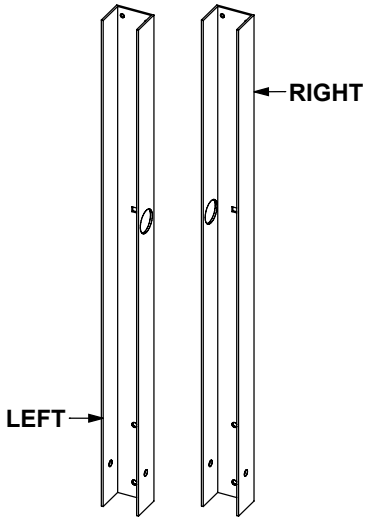

LEG

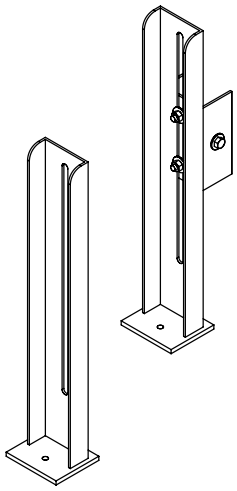

ATTACHMENT BRACKET

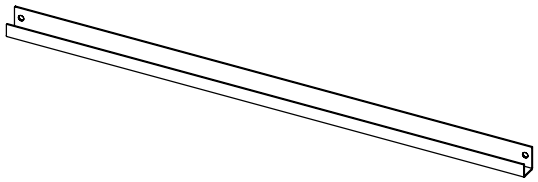

HARDWARE

5/16x2-1/2 CARRIAGE BOLT
5/16x1 CARRIAGE BOLT
5/16x3-1/4 HEX BOLT
1/4x2-1/2 CARRIAGE BOLT
5/16 SELFLOCK NUT
1/4 SELFLOCK NUT
5/16 WASHER
CLAMP ADAPTER

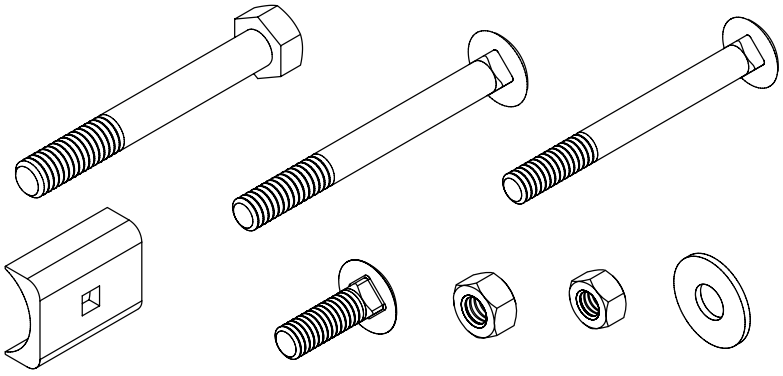

XP3-ANGLE WEDGE : ASSEMBLY

XP3-ANGLE WEDGE HANDRAIL: Place the post cap on the top handrail over the post making sure that the orientation of the post is correct. Align the holes in top handrail post cap and handrail post and fasten with ¼ x 2 ½ carriage bolts ¼ selflock nuts. Next insert the bottom handrail tube into the hole on the side of the post and fasten with 5/16 x 2 ½ carriage bolt, clamp adapter, and 5/16 selflock nut. Repeat this process on the opposite side to complete the handrail assembly.

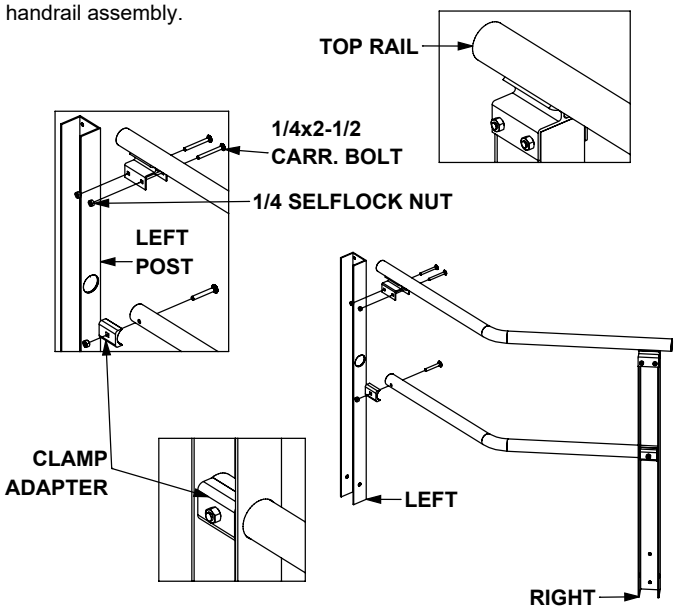

XP3-ANGLE WEDGE ATTACHMENT BRACKET: To connect an angle wedge landing to a ramp an attachment bracket will be needed. Align the holes in the angle wedge base and attachment bracket and fasten with 5/16x1 carriage bolts, 5/16 washers, and 5/16 selflock nuts.

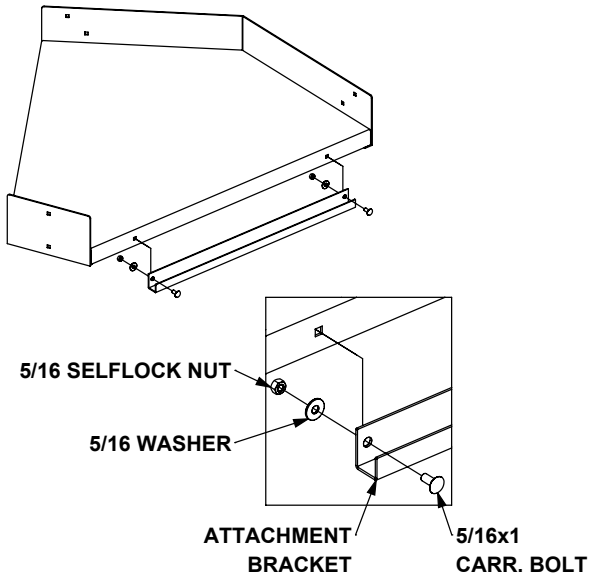

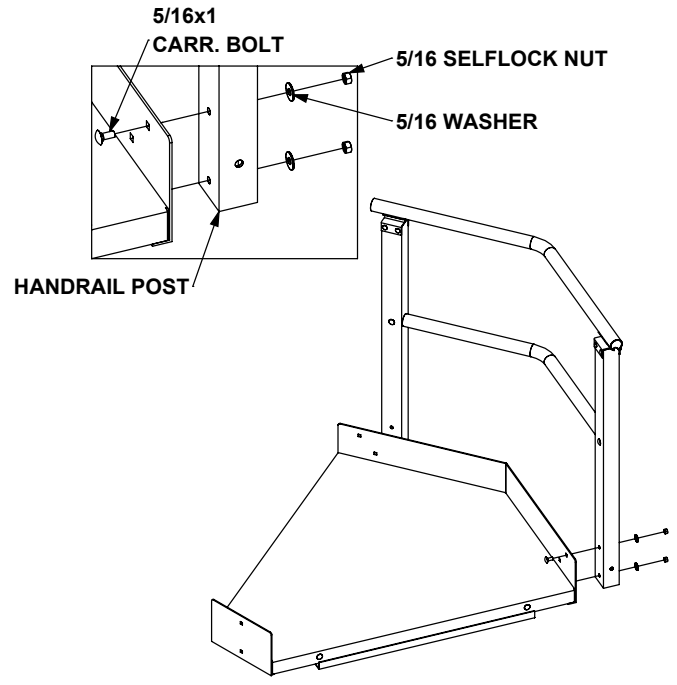

XP3-ANGLE WEDGE HANDRAIL ATTACHMENT: Fasten handrail assembly to angle wedge base by aligning the holes in the angle wedge base with the holes in the handrail post and fasten with 5/16x1 carriage bolts, 5/16 washers, and 5/16 selflock nuts.

XP3-ANGLE WEDGE FRONT LEG ATTACHMENT: To attach front leg place carriage bolts through the square holes of the wedge base and the slotted hole of the leg and fasten with flat washers, and selflock nuts.

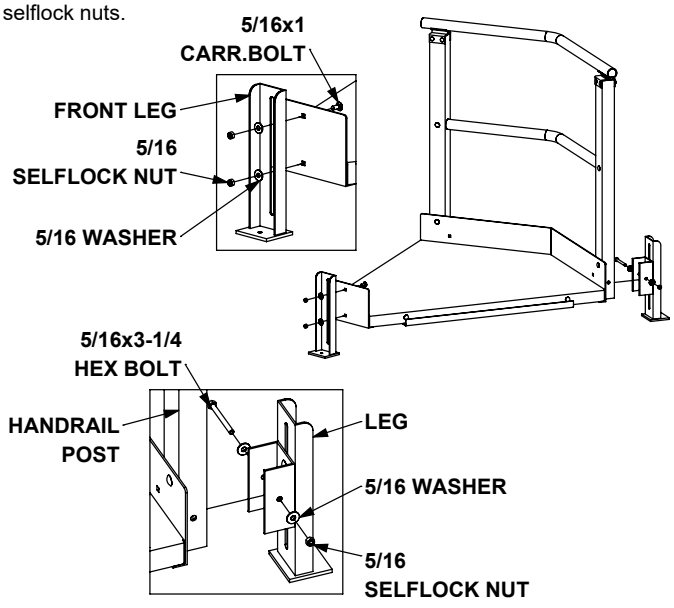

XP3-ANGLE WEDGE REAR LEG ATTACHMENT: Attach rear legs by placing the leg attachment channel over handrail post align the holes and attach using 5/16x3-1/4 hex bolts, 5/16 washers, and 5/16 selflock nuts.

PVI MANUFACTURING
LIMITED WARRANTY

1. LIMITED LIFETIME WARRANTY-THE FOLLOWING APPLIES TO ALL END PURCHASERS OTHER THAN RESIDENTS OF THE STATE OF CALIFORNIA*:

PVI MANUFACTURING, warrants to the original end purchaser of the product is free from defects in material and workmanship under normal use and service. This warranty does not apply to any product that has been subject to misuse, abuse, neglect, alteration, accident, usage not in accordance with the product instructions, acts of God, or improper installation or that has been used for rental purposes or repaired by someone other than PVI MANUFACTURING. This warranty does not cover normal deterioration of the product due to wear and exposure.

*(FIVE YEAR WARRANTY-FOLLOWING APPLIES TO RESIDENTS OF THE STATE OF CALIFORNIA: For a period of five years after the purchase of the product by the original end purchaser of the product, PVI MANUFACTURING warrants to the original end purchaser of the product that the product is free from defects in material and workmanship under normal use and service. This warranty does not apply to any product that has been subject to misuse, abuse, neglect, alteration, accident, usage not in accordance with product instructions, acts of God, or improper installation or that has been used for rental purposes or repaired by someone other than PVI MANUFACTURING. This warranty does not cover normal deterioration of the product due to wear and exposure.)

2. This warranty is limited to repairing or replacing, at the option of PVI MANUFACTURING, any product that is returned to PVI MANUFACTURING and is reasonably determined by PVI MANUFACTURING to be defective. The repair or replacement of a defective product under this warranty will be made by PVI MANUFACTURING without charge of parts or labor. This excludes shipping or delivery charges to and from PVI MANUFACTURING'S place of business. If the product has been discontinued, PVI MANUFACTURING may replace the product with a new product of comparable value and function. PVI MANUFACTURING also reserve the right to refund the purchase price its exclusive warranty remedy.

3. Any claim alleging that the product fails to conform to this warranty may be made only by the original end purchaser and only while such purchaser owns the product. A defective product that is covered by this warranty must be returned, at the purchaser's expense, along with proof of dated of original purchase (such as receipt, check or other document PVI MANUFACTURING deems acceptable that shows the date of purchase and the identity of the product purchaser), along with a description of the alleged defect, to PVI MANUFACTURING, 2620 Industrial Drive, Fairbury, Nebraska 68352.

4. EXCEPT AS SET FORTH HEREIN, PVI MANUFACTURING MAKES NO WARRANTIES, EXPRESSED OR IMPLIED, AND PVI MANUFACTURING DISCLAIMS AND NEGATES ALL OTHER WARRANTIES, INCLUDING WITHOUT LIMITATION, IMPLIED WARRANTIES OF MERCHANTABILITY, FITNESS FOR ANY PARTICULAR PURPOSE, CONFORMITY TO MODELS OR SAMPLES, OR ANY WARRANTIES OR ANY WARRANTIES OR ANY WARRANTIES OR INDEMNITIES AGAINST INTELLECTUAL PROPERTY INFRINGEMENT.

SOME STATES DO NOT ALLOW LIMITATIONS ON IMPLIED WARRANTIES, SO THESE LIMITATIONS MAY NOT APPLY TO YOU. IN NO EVENT WILL PVI MANUFACTURING BE LIABLE FOR ANY INDIRECT, SPECIAL, INCIDENTAL, OR CONSEQUENTIAL DAMAGES OR FOR ANY LIABILITY MORE THAN THE PURCHASE PRICE OF THE PRODUCT.

5. Before using the product, the purchaser must first determine the suitability of the product for its intended use, and the purchaser assumes all risk and liability whatsoever in connection there with.

6. No person, agent, distributor, dealer or company is authorized to change, amend or modify the terms of this warranty.

7. This warranty gives the purchaser specific legal rights, and the purchaser may also have other rights that vary from state to state.

8. The purchaser may not assign the purchaser's rights or obligations under this warranty without the prior written consent of PVI MANUFACTURING.