ONTRAC RAMP

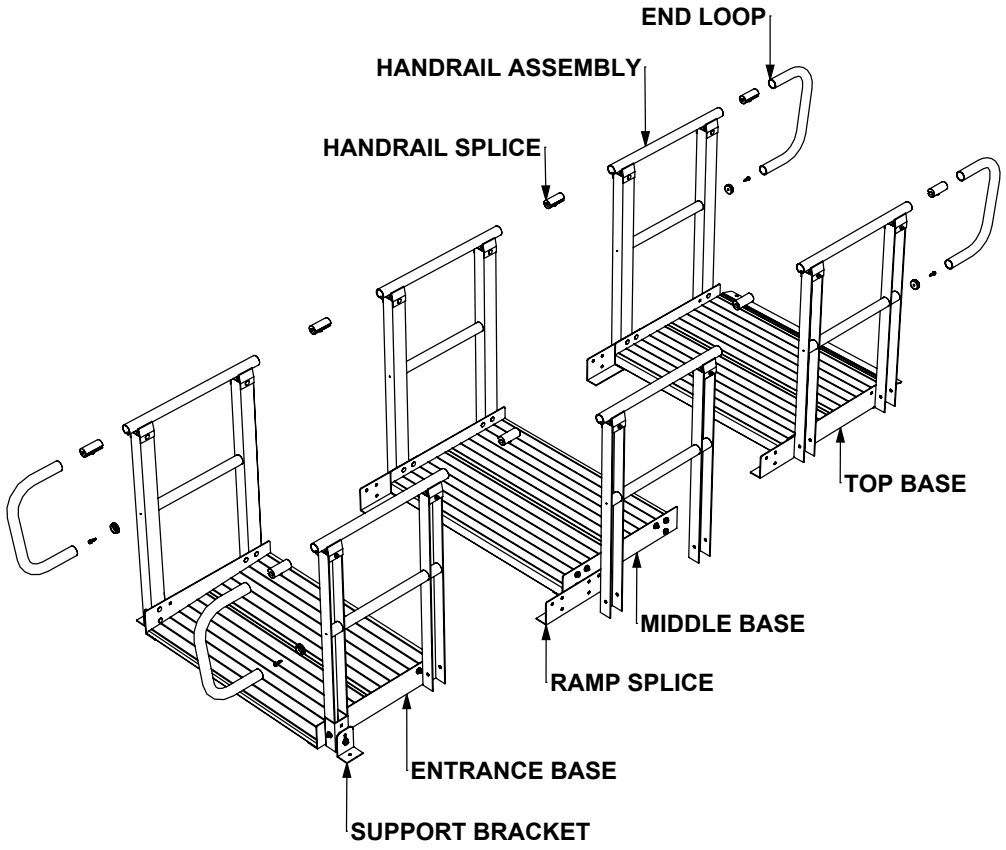

MODEL#	RAMP/LENGTH	H.R./LENGTH	USEABLE/WIDTH	WIEGHT
XPS336	39"	54"	36.00	46 LBS.
XPS436	51"	66"	36.00	69 LBS.
XPS536	63"	78"	36.00	78 LBS.
XPS636	75"	90"	36.00	87 LBS.
XPS736	87"	102"	36.00	96 LBS.
XPS836	99"	114"	36.00	119 LBS.
XPS936	111"	126"	36.00	128 LBS.
XPS1036	123"	138"	36.00	137 LBS.

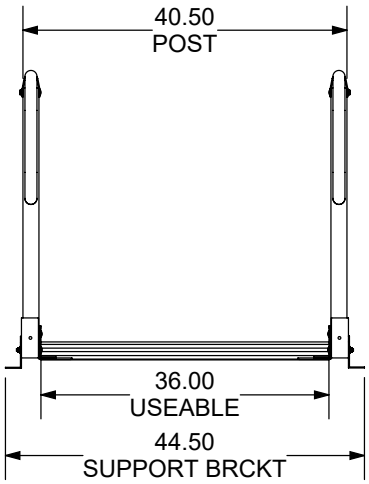

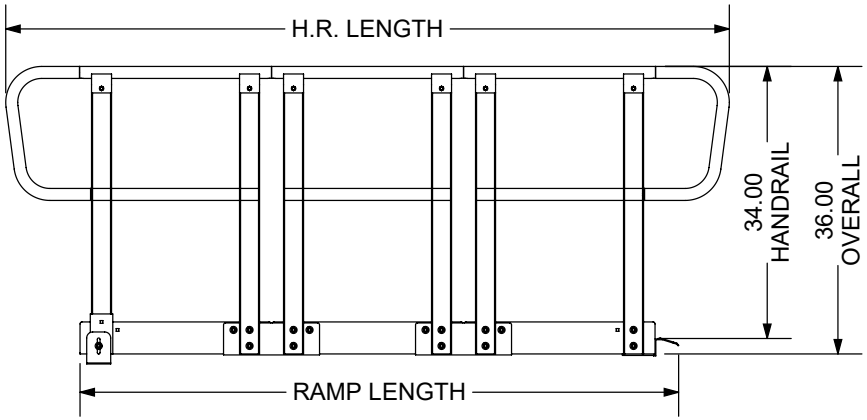

STEP#1: Splice ramp base sections together using the ramp splice by running a carriage bolt through the square holes in the frame rail of the ramp base and round holes of the ramp splice, fasten with flat washers and selflock nuts.

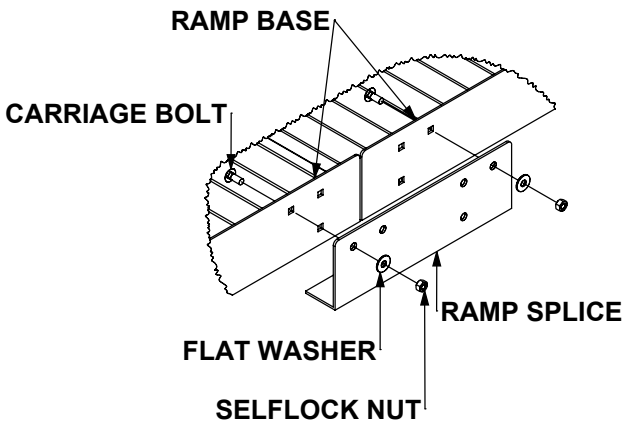

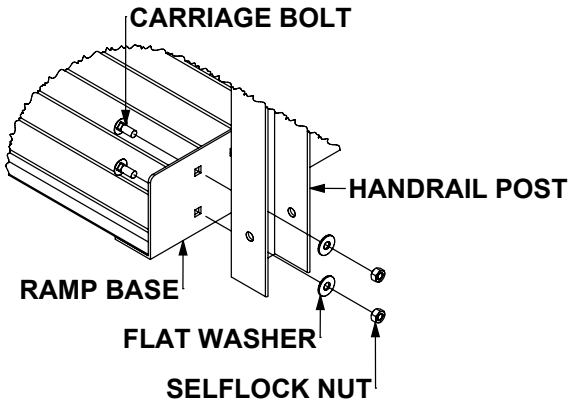

STEP#2: Attach handrails to ramp base by placing carriage bolts through the ramp frame and the handrail post and fasten with flat washers and selflock nuts. If handrail post is at a splice location place carriage bolts through the ramp frame, the ramp splice, and the handrail post. Before attaching next section of handrail place handrail splice inside of handrail tube to splice top handrail tube together.

STEP#3: Attach an end loop at the top and bottom ends of the ramp. Place a handrail splice inside of the handrail tube, using the pre-drilled hole in the handrail post attach the plastic cap to post using a self-tapping screw. Slide standard end loop over the handrail splice and plastic cap, tighten set screw in handrail splice.

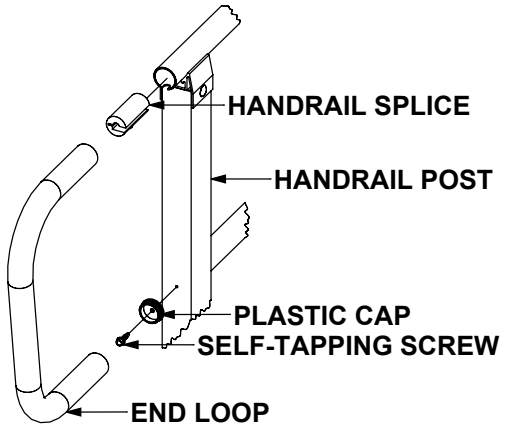

STEP#4: Attach support brackets by placing the leg attachment channel over handrail post align the holes and attach using a hex bolt, flat washer, and selflock nut. To adjust the height, loosen the selflock nut on the front side of the support bracket assembly and set height, once height is set re-tighten selflock nut.

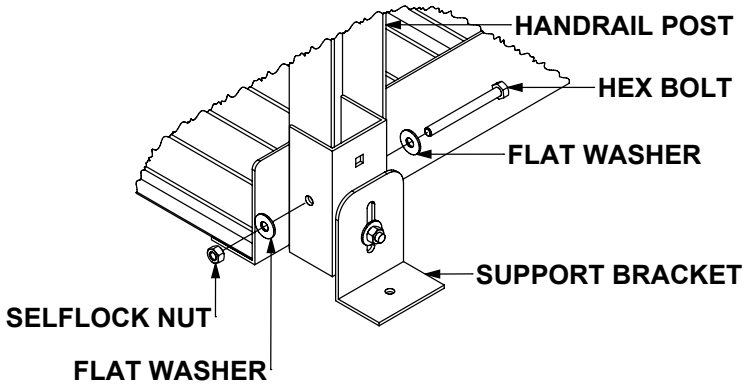

STEP#5: Place ramp in the final resting position and anchor to the ground using the supplied concrete screws. At the top end of the ramp place concrete screw through the pre-drilled holes in the ramp hook, at the bottom end of the ramp use the holes in the support bracket angles to anchor the bottom end of the ramp to the ground.

