PRAIRIE VIEW INDUSTRIES

MODULAR RAMP SYSTEM ASSEMBLY MANUAL

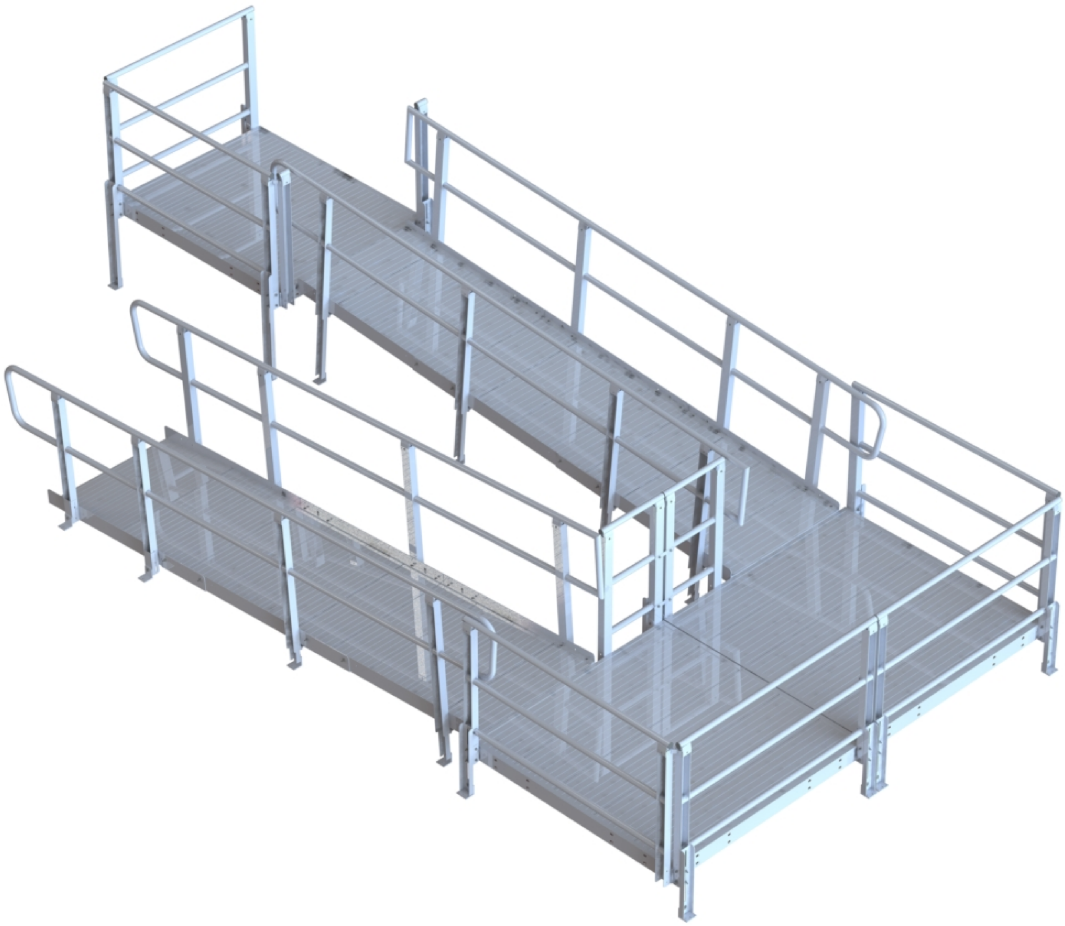

Prairie View Industries, Inc. Phone: 800-554-7267 | Email: info@pviramps.com | www.pviramps.com

CONTENTS

OVERVIEW 2-5

SECTION 1: TOOLS & HARDWARE

1.1 TOOLS REQUIRED 6
1.2 HARDWARE LIST 6

SECTION 2: STANDARD PARTS

2.1 STANDARD RAMP PARTS 7
2.2 STANDARD ENTRANCE PARTS 8
2.3 STANDARD LANDING PARTS 9
2.4 OPTIONAL PARTS 10
2.5 STANDARD LANDING CONFIGURATIONS 11

SECTION 3: LANDING ASSEMBLY

3.1 LANDING HANDRAIL INSTALLATION 12
3.2 POST CORNER BRACKET ASSEMBLY 12
3.3 MULTIPLE LANDING BASE ASSEMBLY 13
3.4 LANDING LEG ASSEMBLY 14
3.5 CENTER LEG BRACKET ASSEMBLY 14
3.6 UNDER SUPPORT ASSEMBLY 14
3.7 LONG LEG SUPPORT LANDING ASSEMBLY 15
3.8 RAMP ATTACHMENT CLIP ASSEMBLY 16
3.9 RAMP TO LANDING ASSEMBLY 16
3.10 UPPER "T" INSTALLATION 16

SECTION 4: RAMP ASSEMBLY

4.1 RAMP BASE ASSEMBLY 17
4.2 RAMP HANDRAIL ASSEMBLY 18 -19
4.3 ENTRANCE BASE ASSEMBLY 20
4.4 ENTRANCE HANDRAIL ASSEMBLY 21
4.5 RAMP LEG ASSEMBLY 22
4.6 ENTRANCE SUPPORT BRACKET ASSEMBLY 22
4.7 LONG LEG SUPPORT RAMP ASSEMBLY 22

SECTION 5: OPTIONAL PARTS

5.1 ANGLE WEDGE LANDING ASSEMBLY 23
5.2 MULTIPLE ANGLE WEDGE ASSEMBLY 23
5.3 LANDING TRANSITION ASSEMBLY 24
5.4 LANDING PAD ASSEMBLY 24
5.5 LANDING HURRICANE KIT ASSEMBLY 25
5.6 RAMP HURRICANE KIT ASSEMBLY 26

SECTION: OVERVIEW

APPEARANCE: The PVI Modular Ramp System with handrail has a clean uncluttered appearance that will fit in most surroundings.

LOW MAINTENANCE: All aluminum design has lifetime durability in all kinds of climates without periodic painting or renewal of preservatives. The aluminum alloys used are resistant to salt corrosion (noncorrosive or pet safe salt is recommended). The modular ramp system may even be used in coastal areas and cold climates that require the use of deicers.

SEMI PERMANENT: The PVI Modular Ramp System serves the purpose as well or better than a permanent concrete ramp, but can still go along with the user if they move, or can be removed and resold when no longer needed. The PVI Modular Ramp System is designed to be freestanding and completely independent of the existing structure. In most cases this simplifies compliance with local codes and may eliminate the requirement for a permit.

FLEXIBLE COMPONENTS: If or when the PVI Modular Ramp System is moved it is easy to add to, subtract from, or reconfigure the PVI Modular Ramp System to a new location. This feature makes the PVI Modular Ramp System attractive to lease/rental opportunities that may be available with insurance companies serving rehabilitation needs. For this reason, it is best to use standard and/or existing components when possible. Custom designs are available but will add to cost and slow delivery time. Custom components are non-returnable.

EASY INSTALLATION: The components of the PVI Modular Ramp System are designed to be quickly and easily assembled with simple/common hand tools and set into place without the need for heavy construction equipment. A van, pickup, or small trailer is all that is needed to transport the ramp components to the job site.

SHIPPING: The PVI Modular Ramp System components are stocked and warehoused so in most cases an order can be quickly filled and shipped. The lightweight aluminum design and plant location make it economical to ship to any part of the country.

COMPONENTS:

RAMPS
WIDTH: Standard width 36”
LENGTH: Minimum length 48” entrance ramp/24" top ramp
RAMP SURFACE: Aluminum planking with lateral grooves.
CURBING: 4” high standard curb.
SLOPE: Adjustable from 1on12 to 2on12.

LANDINGS
LANDING BASES: Standard sizes 4x4(50.375"x50.375"), 4x5(50.375"x62.375"), & 5x5(62.375"x62.375"). Bases can be connected to make 4x8, 5x8, & 5x10.
SURFACE: Aluminum planking with lateral grooves and knurl.
HEIGHT: Minimum height of 3”/Maximum height of 60”
LOAD CAPACITY: 100 lb./sq. ft.

LAYOUT CONSIDERATIONS

NOTE: ADA COMPLIANCE IS USUALLY OPTIONAL *(GUIDELINE ONLY)* **FOR RESIDENTIAL APPLICATIONS.**

SLOPES: The ADA recommends a slope of 1on12 when possible. However, when space is limited or other considerations require a steeper ramp, the PVI Modular Ramp System will accommodate slopes up to 2on12. When selecting the slope of the ramp the capabilities and safety of the users and their equipment must be considered.

HANDRAIL: ADA requires handrail on any system with a rise of 6” or more. All PVI Modular Ramp Systems require handrail. Ramps and landings will not be sold without handrail for safety reasons as well as the overall design of the ramp system.

RAMP CONFIGURATIONS: The usable width of the ramp is 36” with the overall width of the ramp being 42”. The length of the individual ramp segments are as follows:2', 3’, 4’, & 5’. The segments are used to make lengths from 4’ and longer in 1’ increments.

RAMP AND LANDING ASSEMBLY: Complete detailed assembly instructions are included with each PVI Modular Ramp System. Assembly time for ramps is approximately one-man hour per 20 feet of ramp length. Assembly time for landings is approximately ½ man hour per landing base. The PVI Modular Ramp System can be assembled into sub-assemblies for easy transport to the job site. Site preparation, transportation, and anchoring time are not included.

NOTE: DURING ASSEMBLY DO NOT TIGHTEN HARDWARE ALL THE WAY UNTIL ASSEMBLY IS COMPLETE.

FOOTING AND ANCHORING: The PVI Modular Ramp System is designed to be a freestanding, independent structure that does not have to be permanently attached to the building it serves. Each supporting leg is independently adjustable to allow for varying ground conditions. Adjustments due to settling or heaving can be made with a ratchet. Landings must have a minimum of one leg anchored on each of the two opposite sides. Each freestanding ramp must be anchored at the upper and lower end. Anchoring may consist of lag screws or bolts into existing concrete, precast pads, patio pavers or poured in place.

PVI MODULAR RAMP SYSTEM ASSEMBLY STEPS

STEP 1: Unpack all components and make sure all components on the packing list are present.

STEP 2: Assemble top landing/landing#1.
- (a) Select landing configuration.
- (b) Fully assemble landing with provided components.
- (c) Set in place and level.

STEP 3: Assemble top ramp/ramp#1

STEP 4: Assemble lower landing/landing#2.

STEP 5: Assemble bottom ramp/ramp#2.

STEP 6: Check all hardware to ensure all hardware is tight.

NOTE: SOME SYSTEMS MAY ONLY REQUIRE ONE LANDING AND ONE RAMP IF SO SKIP STEPS 4 & 5.

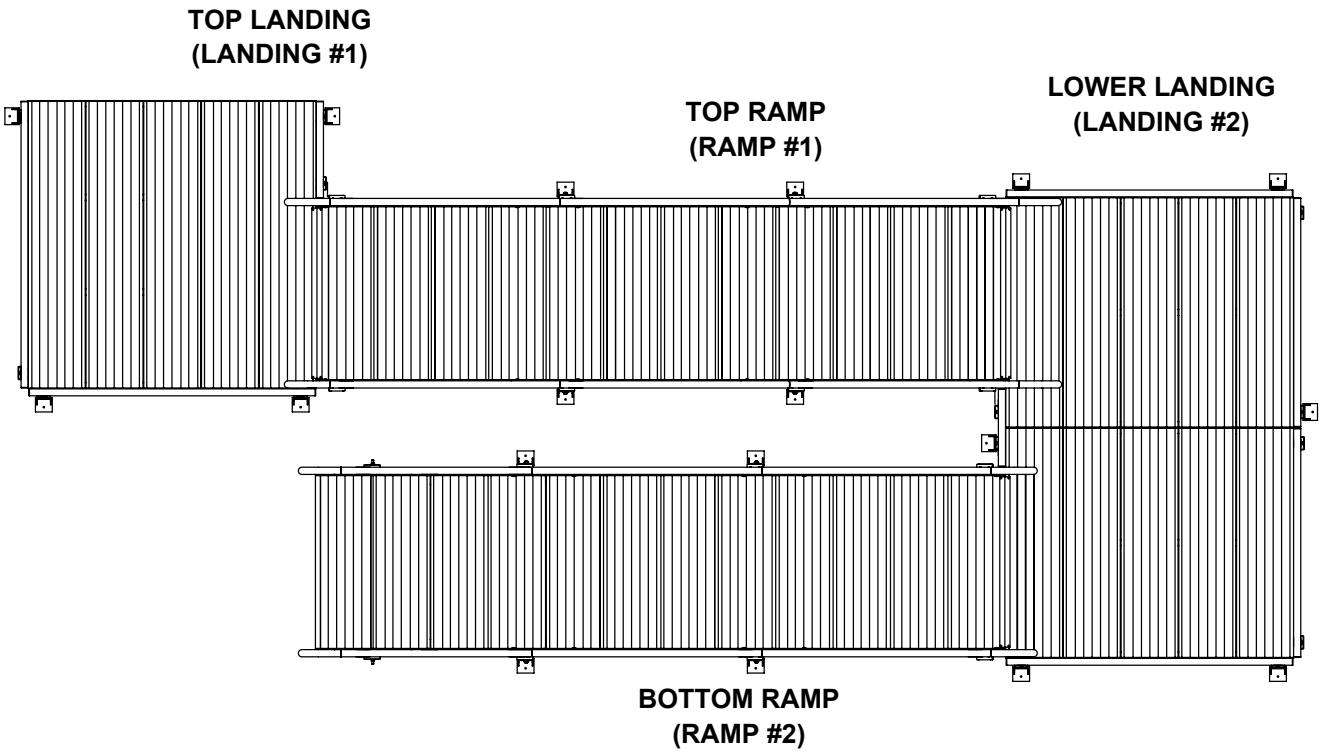

SECTION 1:TOOLS & HARDWARE

1.1 TOOLS REQUIRED:

- SAW HORSES (TWO PAIR RECOMENDED)
- RATCHET
- 1/2" DEEP WELL SOCKET
- 1/2" WRENCH
- 7/16" NUTDRIVER
- 1/4" MASONRY BIT
- 5/32" ALLEN WRENCH
- CORDLESS DRILL
- #2 PHILLIPS DRILL BIT
- TAPE MEASURE
- BUBBLE LEVEL
- BAR CLAMPS
- RATCHET STRAPS

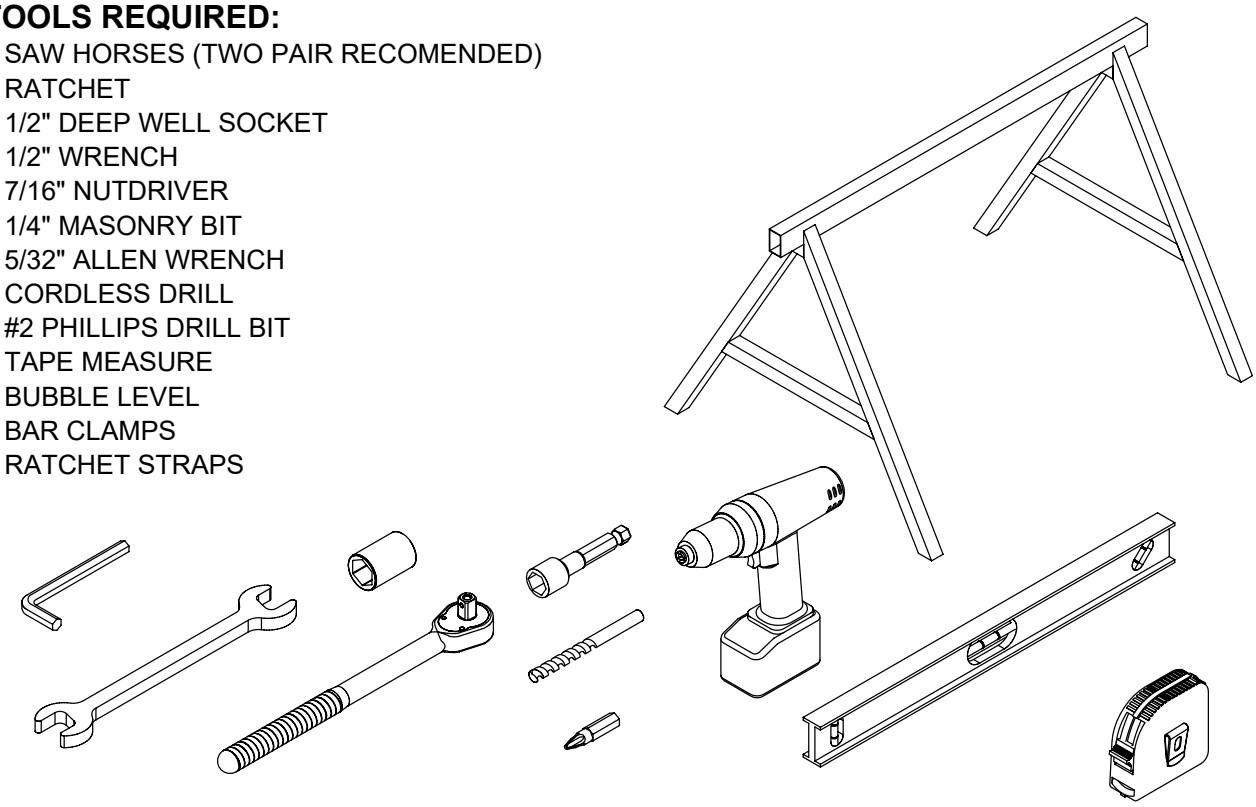

1.2 HARDWARE LIST:

- 5/16x1 CARRIAGE BOLT
- 5/16x3-1/4 HEX BOLT
- 5/16x1-1/2 HEX BOLT
- 5/16x3/4 FLANGE BOLT
- 5/16 SELFLOCK NUT
- 5/16 WASHER
- #14x1 HEX HEAD SELF-TAPPING SCREW
- #10 SELF-TAPPING SCREW
- HANDRAIL SPLICE ASSEMBLY (*RAMPS*)
- HANDRAIL SPLICE HALF TAPPED (*LANDINGS*)

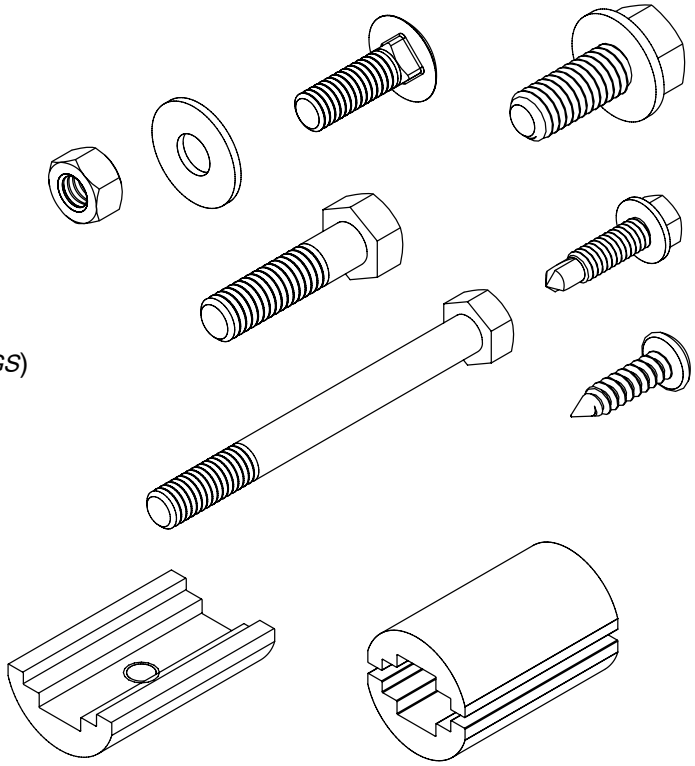

SECTION 2: STANDARD PARTS

2.1 RAMP PARTS

RAMP BASE 2', 3', & 4'

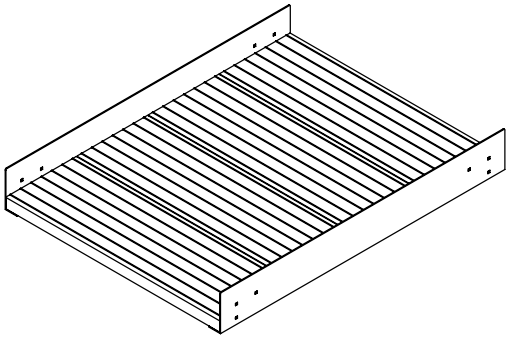

RAMP POST

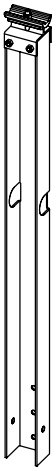

RAMP HANDRAIL TUBE

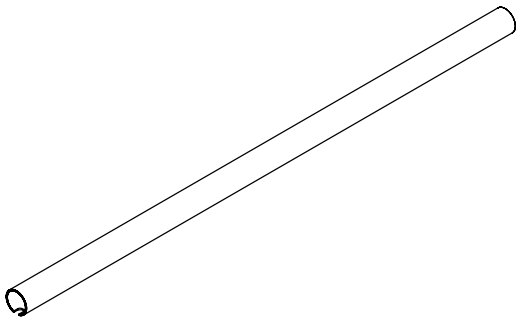

SINGLE POST	DOUBLE POST
24.00	18.50
36.00	30.50
48.00	42.50

RAMP SPLICE

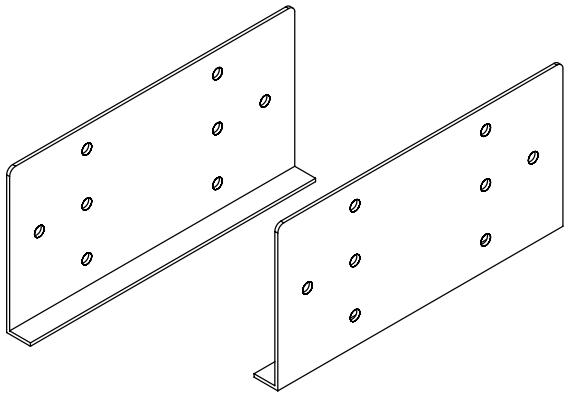

RAMP END LOOPS

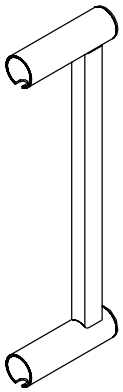

UPPER"T"

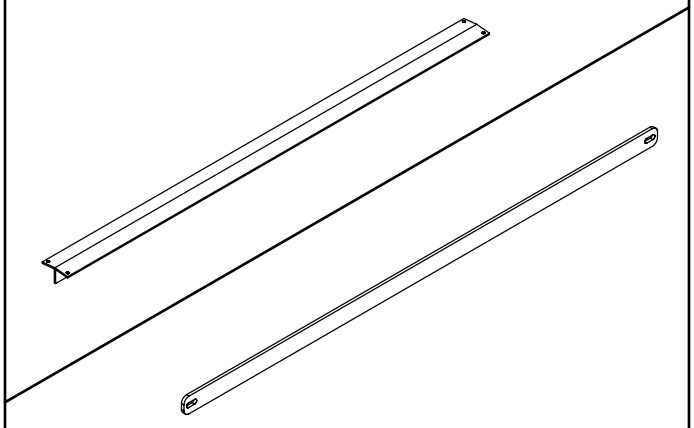

LONG LEG SUPPORT STRAP

LEG 12",18",24",30",36",42",48",54",60",&66"

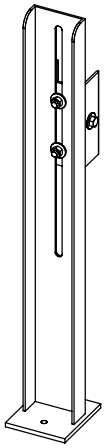

SECTION 2: STANDARD PARTS

2.2 ENTRANCE PARTS

ENTRANCE BASE

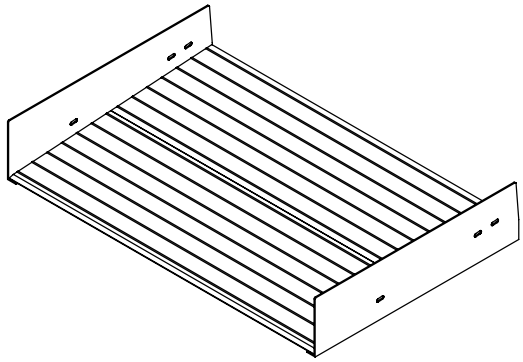

ENTRANCE POST



ENTRANCE HANDRAIL TUBE

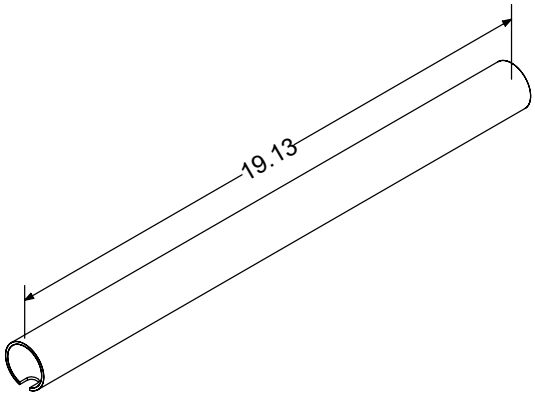

ENTRANCE LOOP

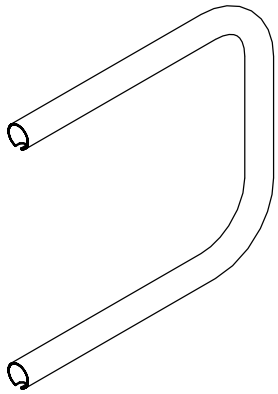

ENTRANCE SPLICE LEFT & RIGHT

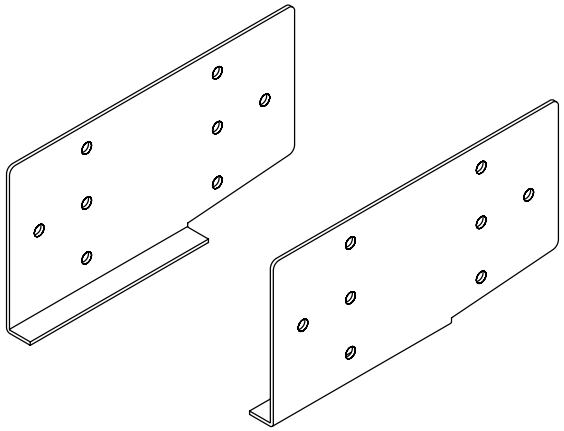

SUPPORT BRACKET

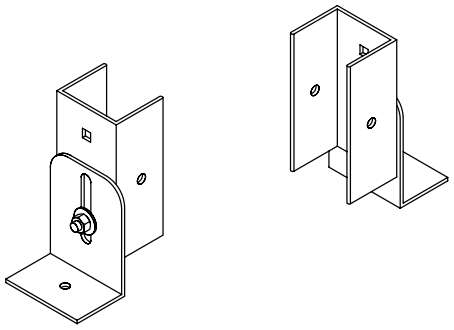

SECTION 2: STANDARD PARTS

2.3 LANDING PARTS

LANDING BASE 4x4, 4x5, 5x5

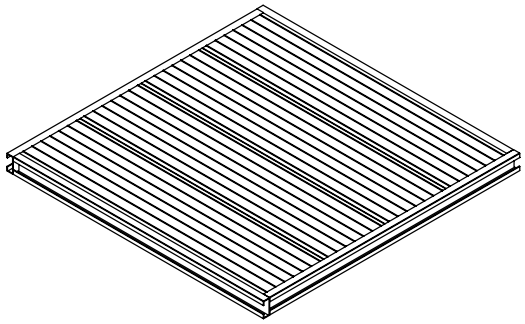

LANDING HANDRAIL

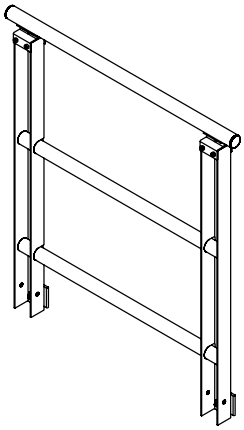

RAMP ATTACHMENT CLIP

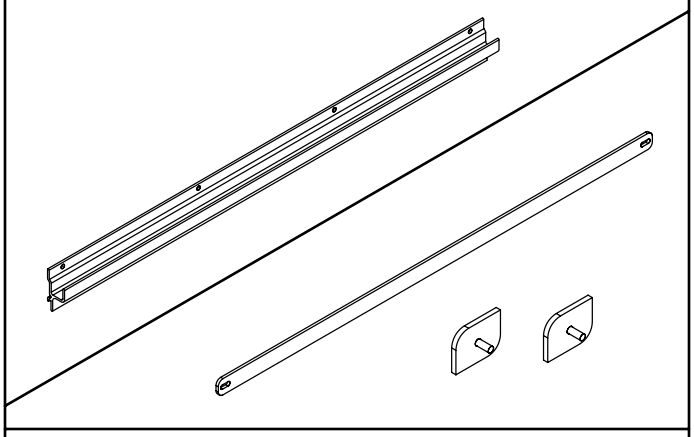

LONG LEG SUPPORT STRAP & BLOCK

LEG 12",18",24",30",36",42",48",54",60",&66"

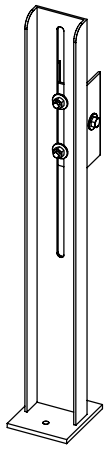

LANDING SPLICE

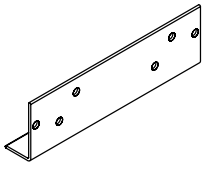

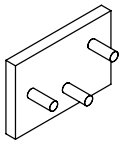

LANDING SPLICE BLOCK

UNDER SUPPORT

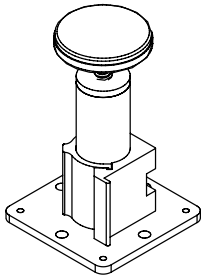

DOUBLE BASE PLATE

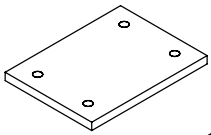

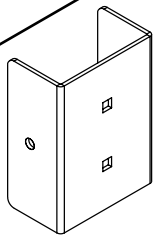

CENTER LEG BRCKT

POST BLOCK

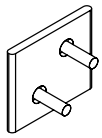

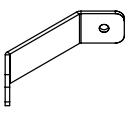

POST CORNER BRCKT

SECTION 2: STANDARD PARTS

2.4 OPTIONAL PARTS

ANGLE WEDGE LANDINGS

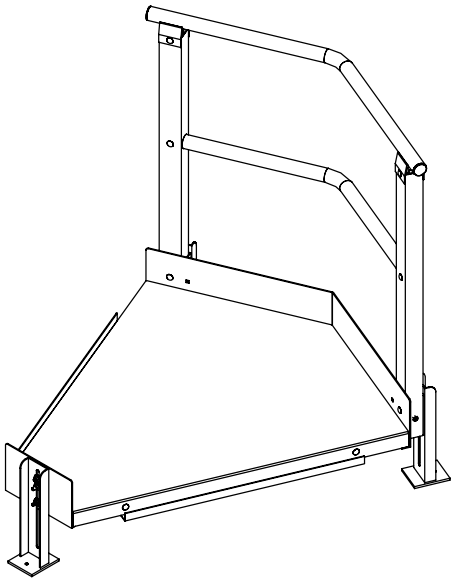

ANGLE WEDGE LANDINGS ARE USED WHEN AN ANGLE OF LESS THAN 90° NEEDS TO BE MADE. ANGLE WEDGE LANDINGS COME IN 30°,45°,&60°.

LANDING TRANSITIONS

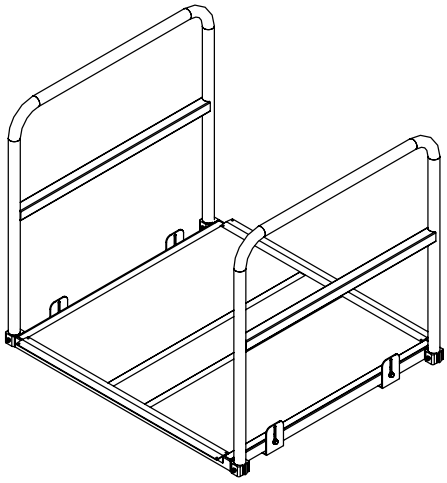

LANDING TRANSITIONS ARE USED WHEN THE ENTRANCE/DOOR OFF OF THE TOP LANDING REQUIRES A LEVEL BRIDGE FROM LANDING TO DOOR. LANDING TRANSITIONS ARE TO BE USED AT MINIMAL HEIGHTS ONLY AND NO SLOPE.

LANDING PADS

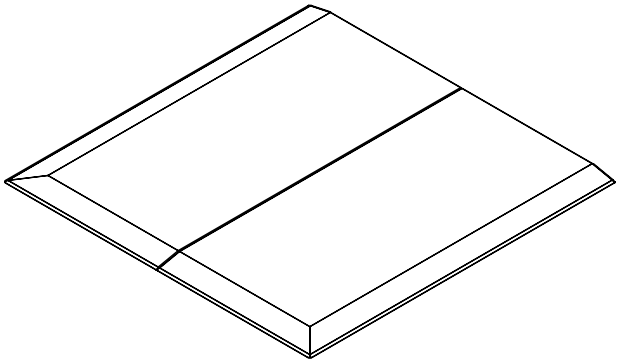

LANDING PADS ARE USED WHEN RAMP ENDING SURFACE IS NOT SUITABLE FOR ENTERING OR EXITING THE MODULAR RAMP SYSTEM. IT IS NOT RECOMMENDED TO USE THIS AS THE ONLY ANCHOR POINT FOR THE BOTTOM OF THE RAMP.

HURRICANE KITS

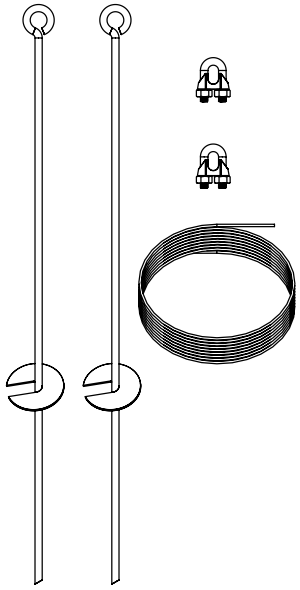

HURRICANE KITS ARE USED WHEN REQUIRED IN APPLICATIONS WHERE LOCAL BUILDING CODES REQUIRE THAT THE MODULAR RAMP SYSTEM BE ANCHORED TO THE GROUND.

SECTION 2: STANDARD PARTS

2.5 LANDING CONFIGURATIONS

THROUGH

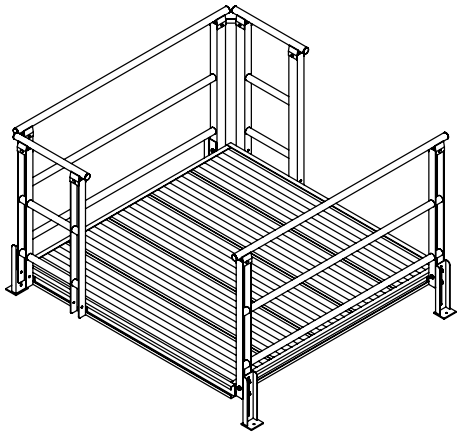

THROUGH/OPEN

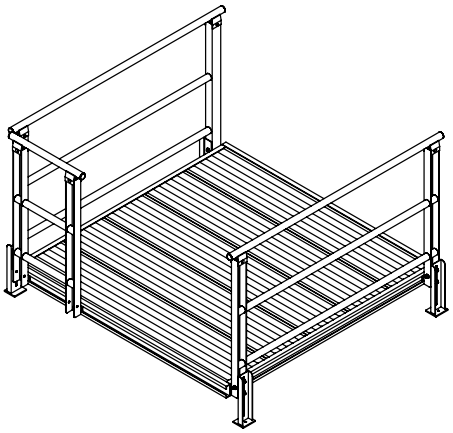

TURN

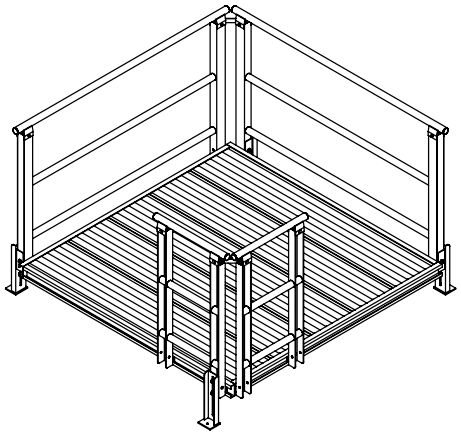

TURN/OPEN

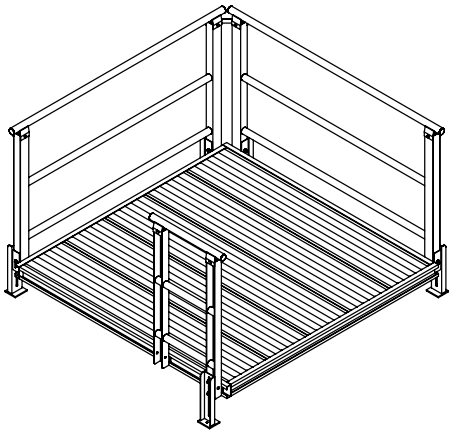

SWITCHBACK

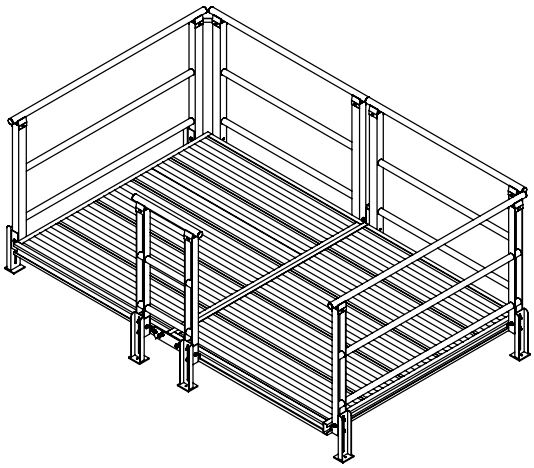

JOG

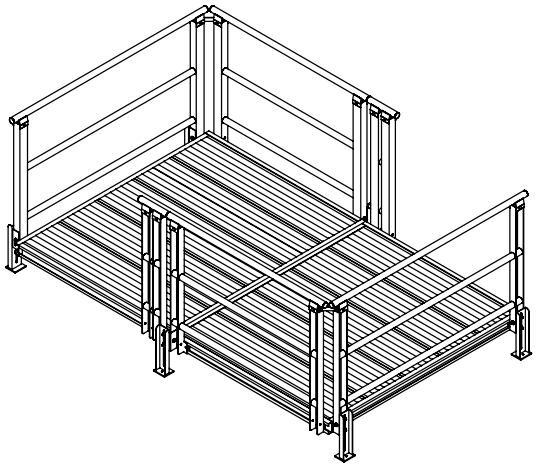

SECTION 3:LANDING ASSEMBLY

3.1 LANDING HANDRAIL INSTALLATION: Determine landing configuration and attach handrail accordingly. To attach handrail, slide the blocks of the landing handrail into the channel of the landing base. Position handrail and tighten all four selflock nuts on the handrail post. NOTE: Handrail on multiple base landings will need to be spliced together, to splice handrail together remove black plastic caps and insert a handrail splice to tie handrail together.

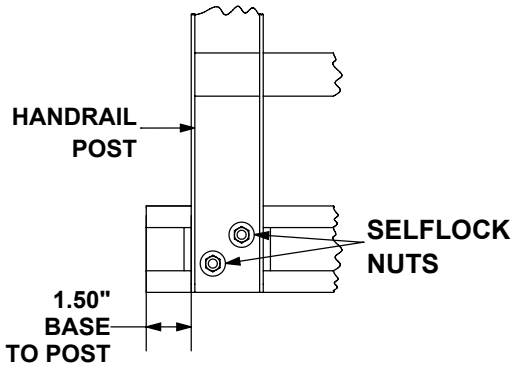

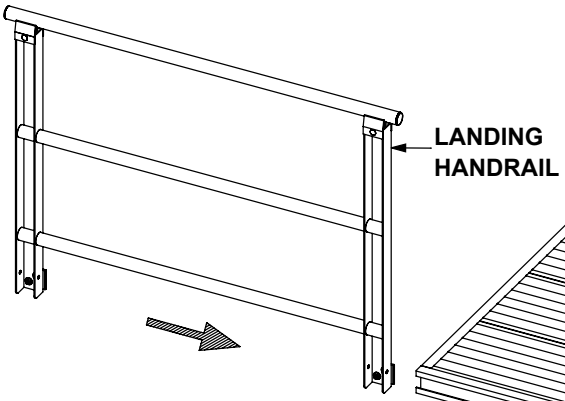

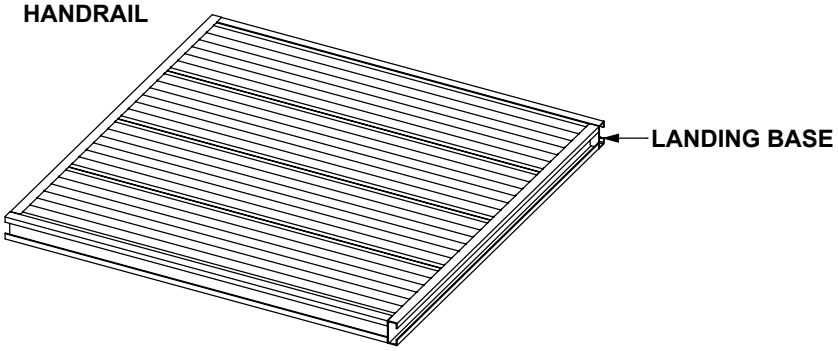

3.2 POST CORNER BRACKET ASSEMBLY: Once all handrail has been assembled attach the post corner brackets in the corners where handrail meet. Place post corner bracket on handrail post with the pilot hole in the post corner bracket centered with the handrail post and attach with a hex head self-tapping screw. If handrail post is not properly lining up with post corner bracket it may be necessary to loosen handrail and reposition handrail.

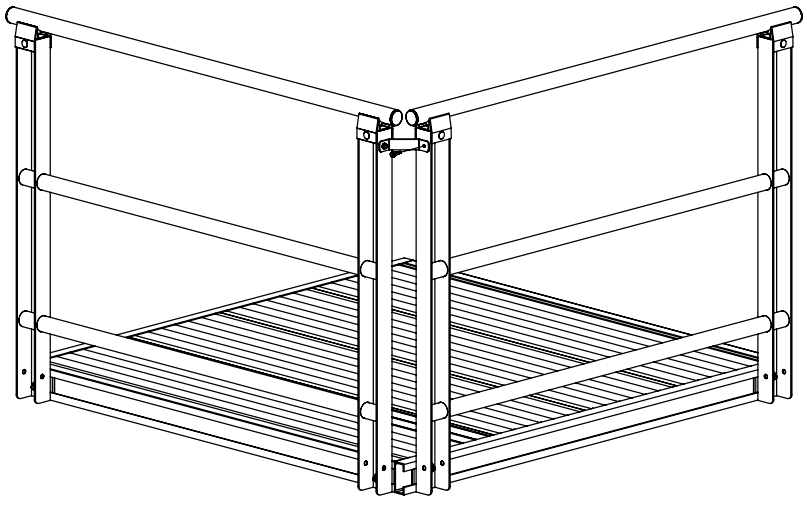

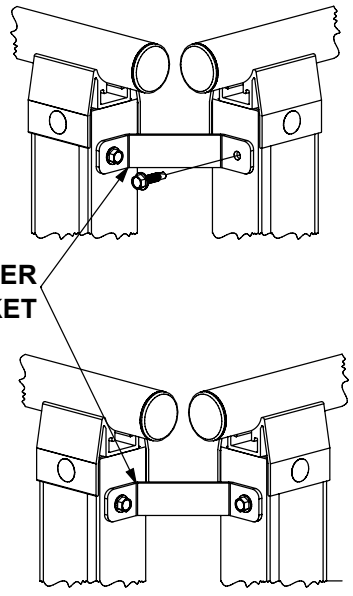

SECTION 3: LANDING ASSEMBLY

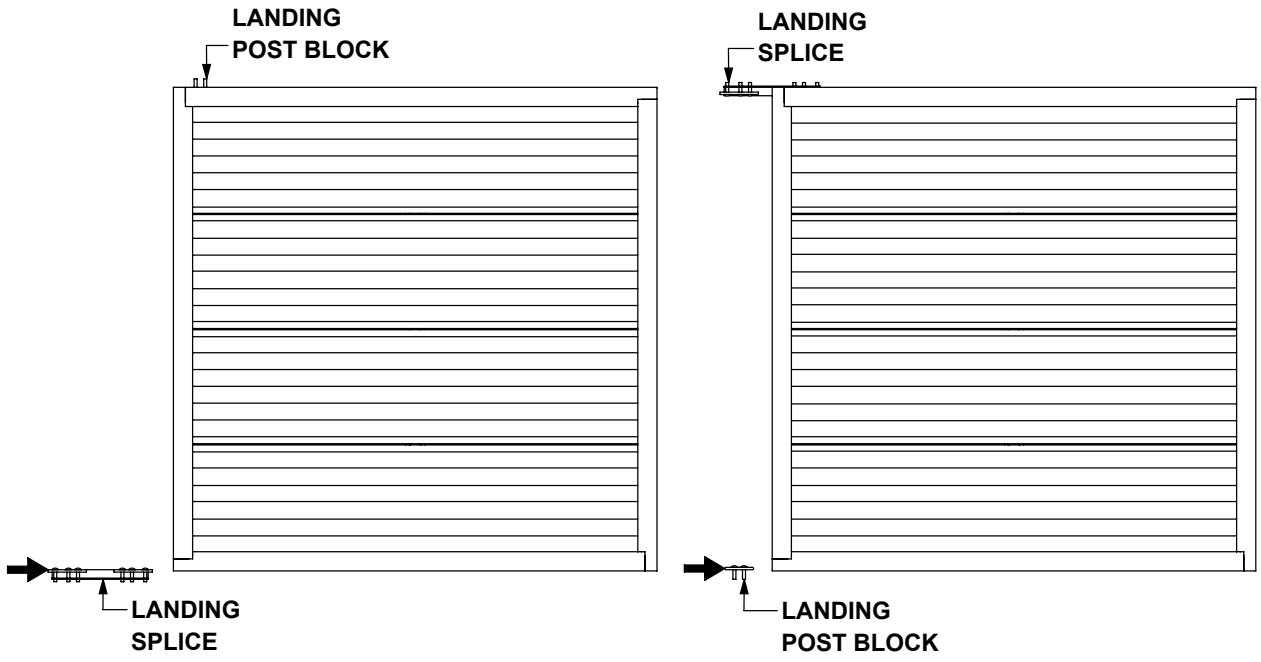

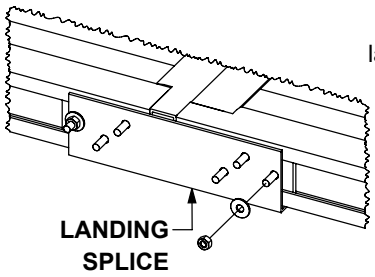

3.3 MULTIPLE LANDING BASE ASSEMBLY: Lay bases side by side on a flat surface place the splice block of the landing splice into the channel of the left landing slide the landing splice all the way to the right towards the center of the landing bases, repeat these steps on the opposite side. Before sliding the bases together make sure a landing post block is inserted into the landing channel. Slide bases together and tighten the selflock nuts of the landing splice. With bases spliced together attach double base plates to the bottom side of the landing bases. Space the double base splice blocks apart evenly on center with landing base channels and attach with self-tapping screws. Once bases are fully spliced together install handrail as shown in section 3.2 Landing Handrail Assembly pg.13.

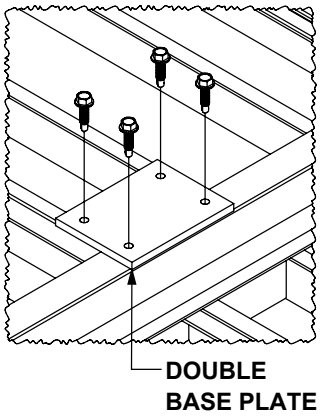

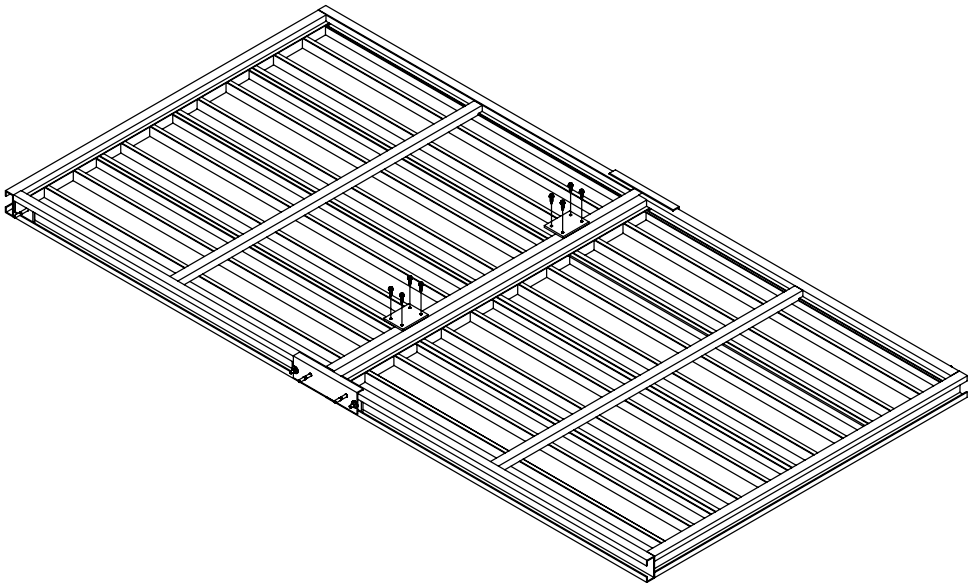

SECTION 3: LANDING ASSEMBLY

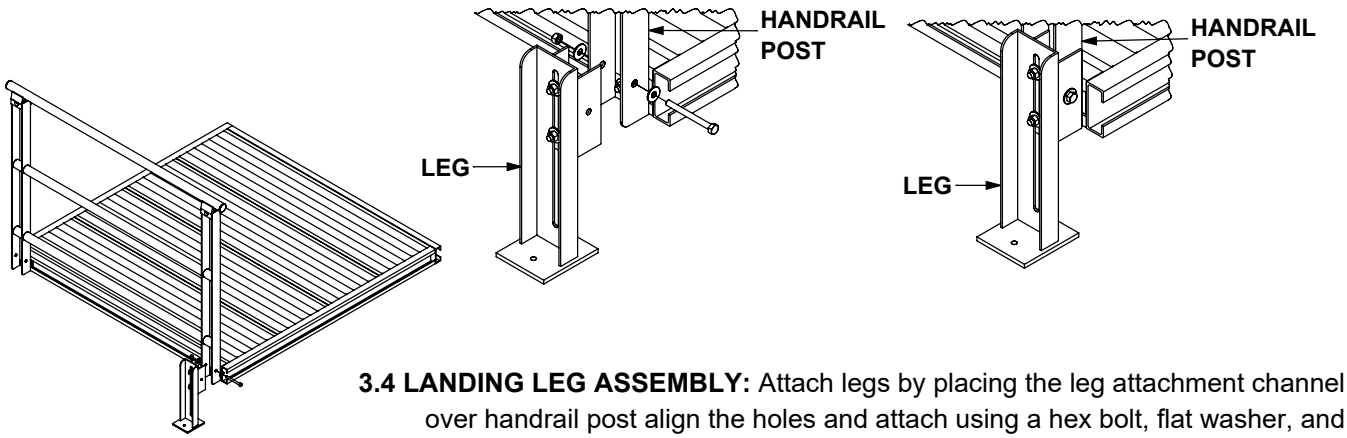

3.4 LANDING LEG ASSEMBLY: Attach legs by placing the leg attachment channel over handrail post align the holes and attach using a hex bolt, flat washer, and selflock nut. To adjust the height, loosen the two selflock nuts on the front side of the leg assembly, once height is set re-tighten selflock nuts.

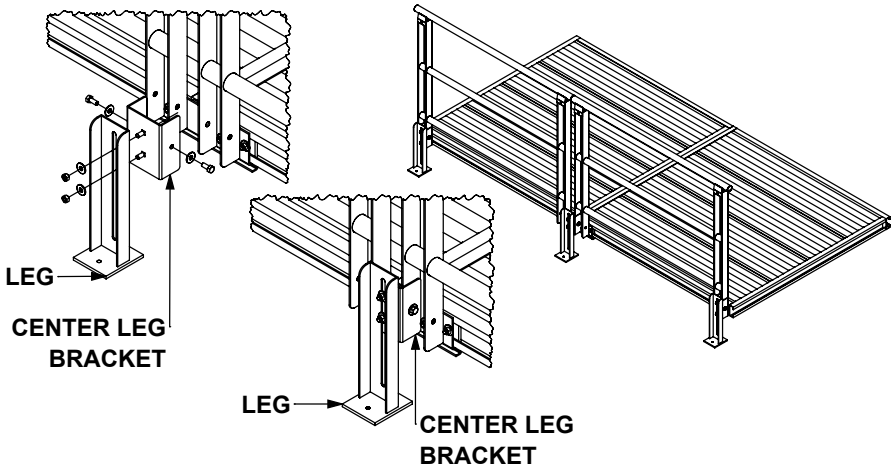

3.5 CENTER LEG BRACKET ASSEMBLY: Remove leg attachment bracket from leg assembly and replace with center leg bracket. Place center leg bracket over the two center handrail posts with the center leg bracket to the inside of each handrail post. Align holes in center leg bracket and handrail posts and fasten with flat washers, hex bolts, and selflock nuts. To adjust the height, loosen the two selflock nuts on the front side of the leg assembly, once height is set re-tighten selflock nuts.

3.6 UNDER-SUPPORT ASSEMBLY:
Place the under-support assembly flush in the corner of the landing base on the bottom side and attach with four self-tapping screws on all four corners of the bracket to the plank ribs. Place the under-support tube into the pocket of the under-support bracket and secure in place with the corner bushing by tightening the set screw in the corner bushing and under-support bracket. Depending on the rise of the landing the under-support tube may need to be cut down to fit the application.

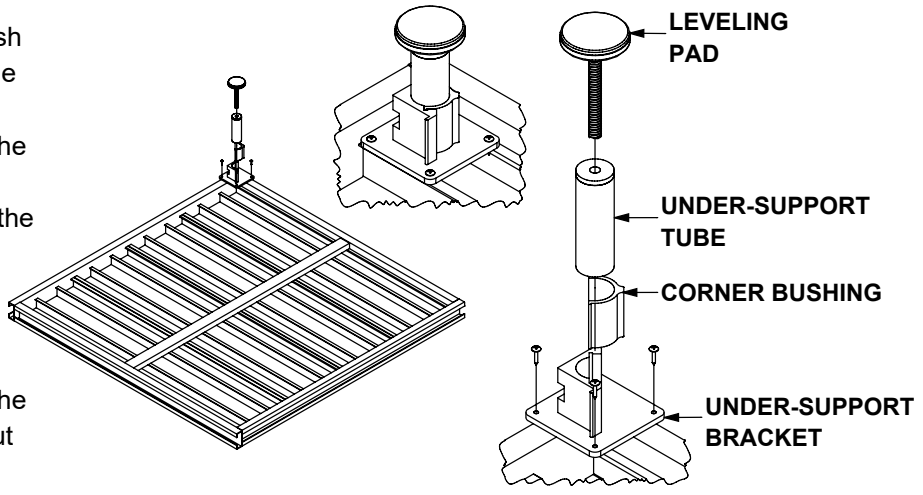

SECTION 3: LANDING ASSEMBLY

3.7 LONG LEG SUPPORT LANDING ASSEMBLY:
Landings exceeding a height of 26” will require long leg supports. This will require two straps per side of landing. Depending on leg orientation the straps will either be attached to the back of the leg or to the side of the leg using a flange bolt, flat washer, and selflock nut. To attach long leg support straps to the landing base, insert a long leg support block into the channel with the press fit bolt towards the outside of the landing base. Turn the long leg support block a half turn and attach long leg support straps with a flat washer and selflock nut. At ramp locations the long leg support straps will be attached to the landing base using self-tapping screws. Place straps inside of landing base channel and attach with flat washer, and self-tapping screw.

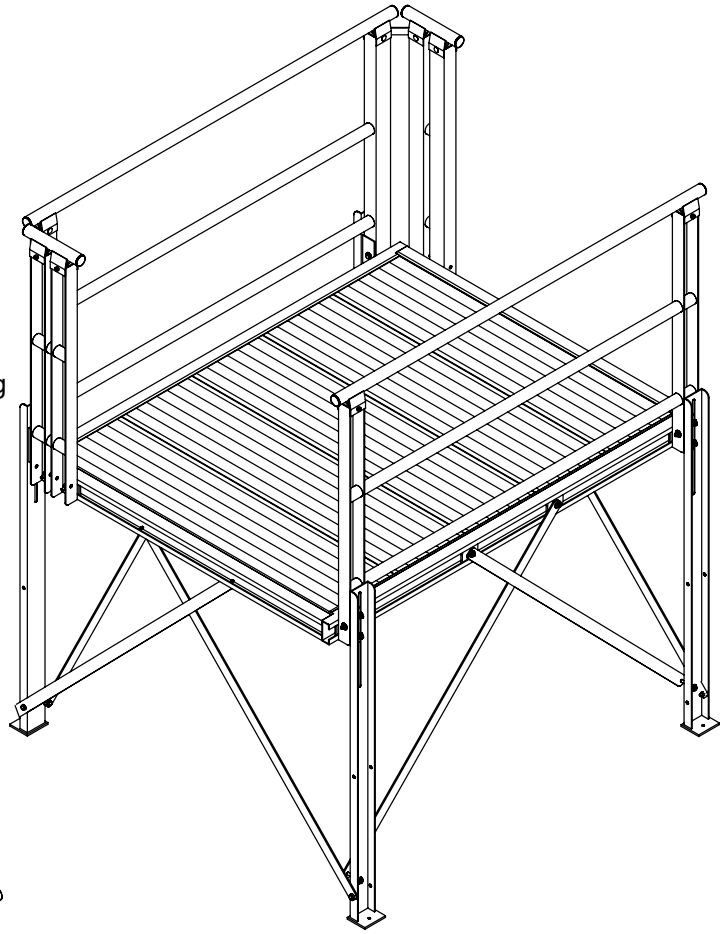

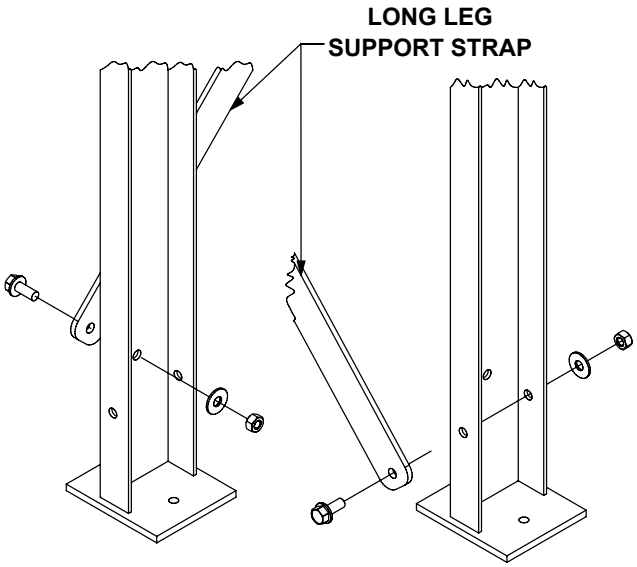

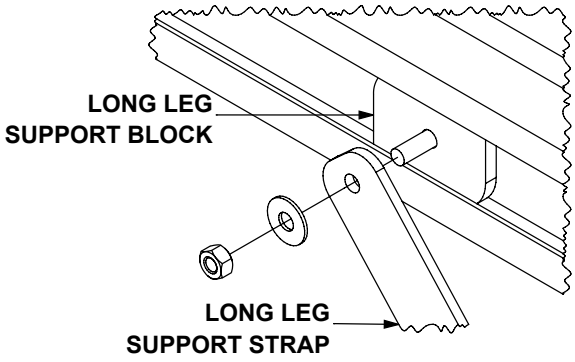

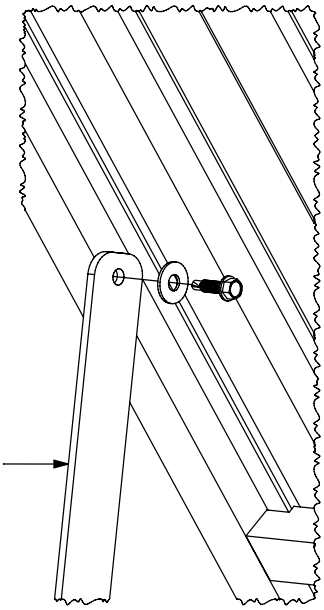

SECTION 3:LANDING ASSEMBLY

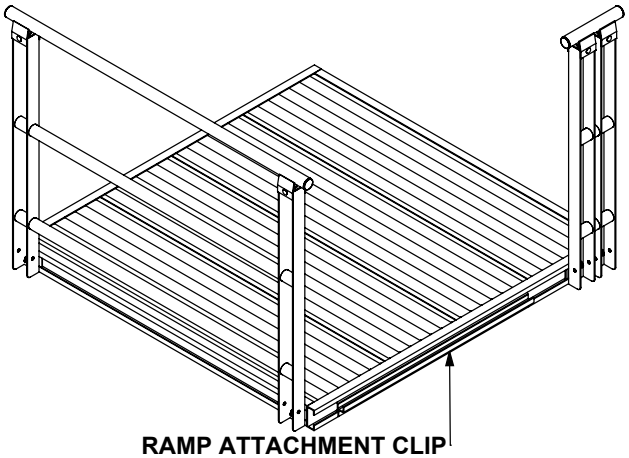

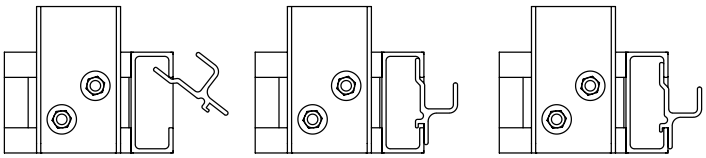

3.8 RAMP ATTACHMENT CLIP ASSEMBLY: Insert the top edge of the ramp attachment clip into the channel of the landing base, rotate part flat against landing channel and lower making sure that the groove in the ramp attachment clip is over the bottom lip of the landing channel. Position ramp on center with the landing opening. If attaching to a pre-existing porch/landing mount the ramp attachment clip using four self-tapping screws a ¼" down from the porch/landing surface to the top edge of the ramp attachment clip making sure the ramp attachment clip is on center with the ramp desired location.

3.9 RAMP TO LANDING ASSSEMBLY: Lift the end of the ramp over the ramp attachment clips and lower into place making sure the rib of the end plank is in the pockets of the ramp attachment clips.

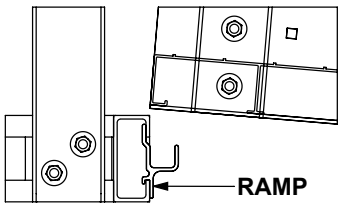

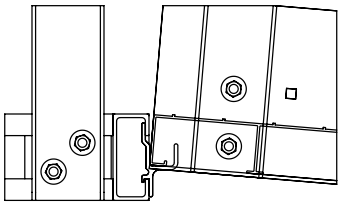

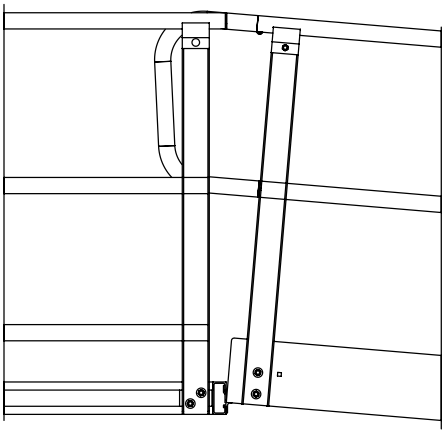

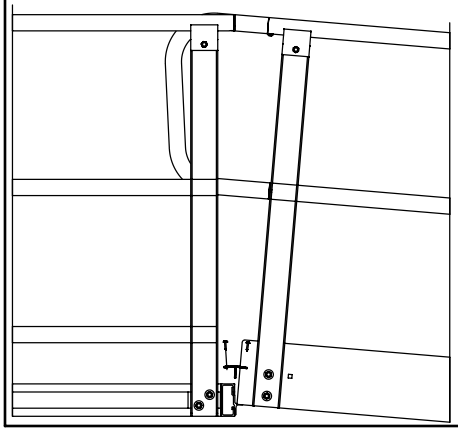

3.10 UPPER "T" INSTALLATION: Place Upper "T" between landing and ramp, center Upper "T" with ramp and attach with self-tapping screws. NOTE: An Upper "T" will only be needed on on the top side of the down sloping end of ramp.

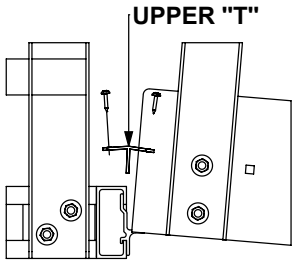

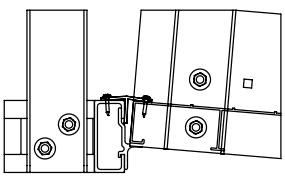

SECTION 4: RAMP ASSEMBLY

4.1 RAMP BASE ASSEMBLY: Lay ramp sections out in a row, starting with the longest section first down to the shortest. At one end of the first section, attach ramp splices. Ramp splices attach through the single/outside hole location with carriage bolt, flat washer, and selflock nut. Move the second ramp section into place and attach sections together. Repeat this process until the entire ramp run is complete.

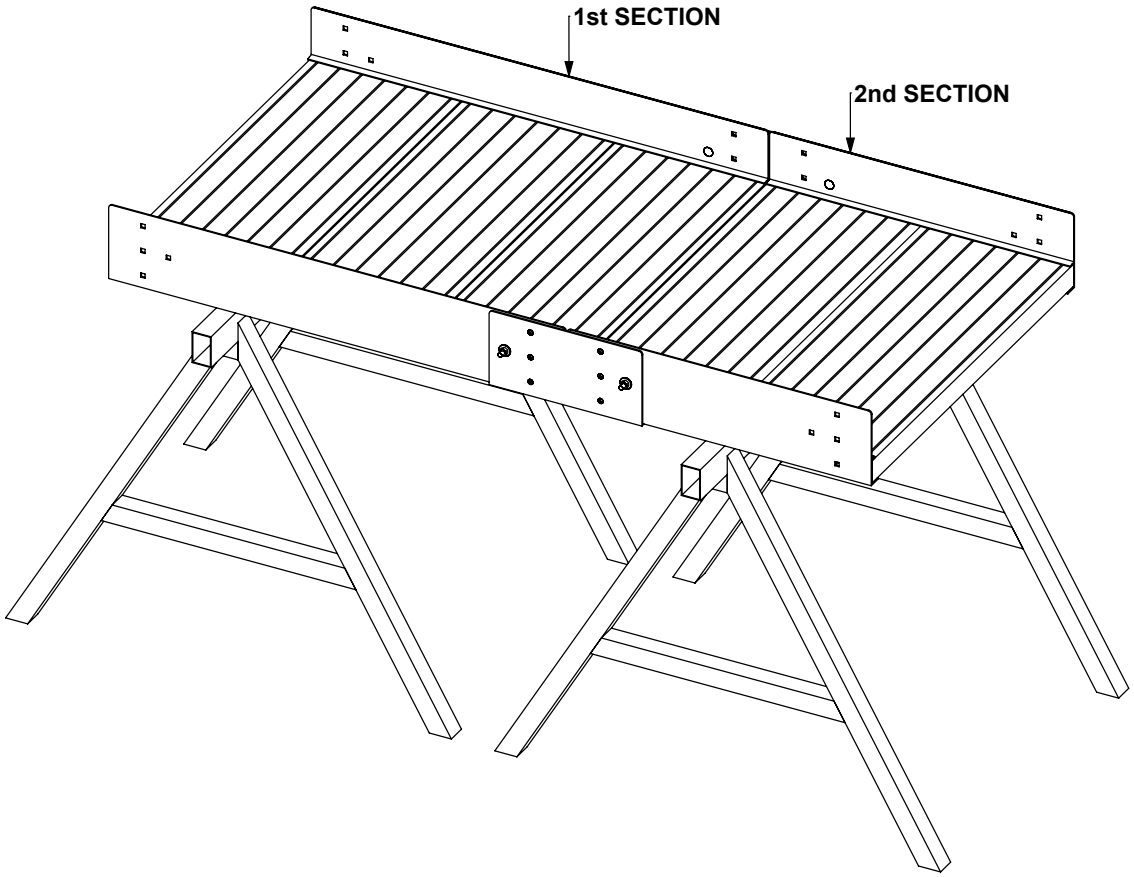

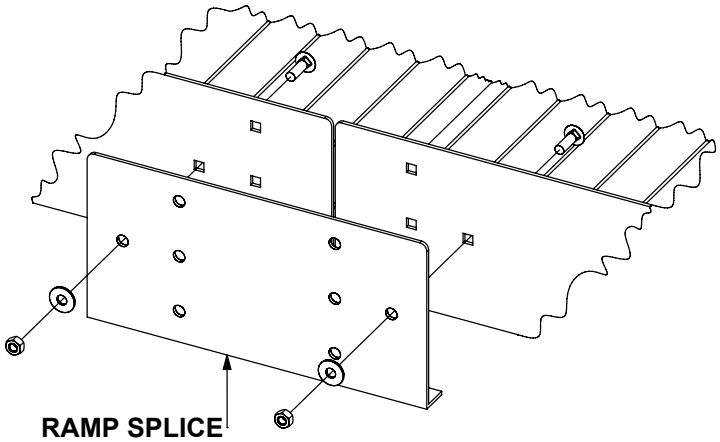

SECTION 4: RAMP ASSEMBLY

4.2 RAMP HANDRAIL ASSEMBLY: Each ramp run will have a double post section and the rest single post sections. Starting with the shortest section, attach one handrail post assembly to the end of the section on both sides. (Fig.A) Attach with two 5/16” x 1” carr. bolt, flat washer, and selflock nut. IMPORTANT: First post handrail assembly needs to be squared up with base when attaching. Tighten post down. Attach next post handrail assembly at opposite end of the same section. (Fig.B) Do not tighten this post down at this point. Locate corresponding handrail tube to match the double post handrail section. Here are the following lengths:

2’ Section - double post 18.50"
3’ Section - double post 30.50"
4’ Section - double post 42.50"

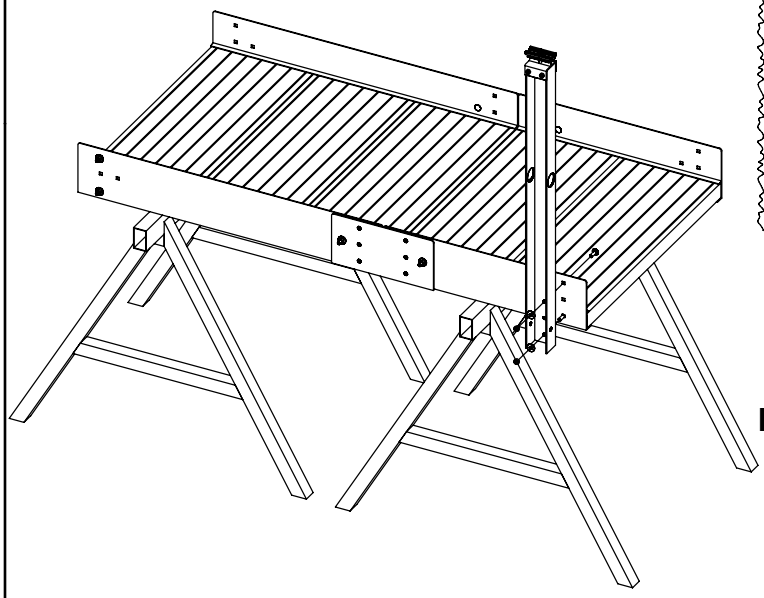

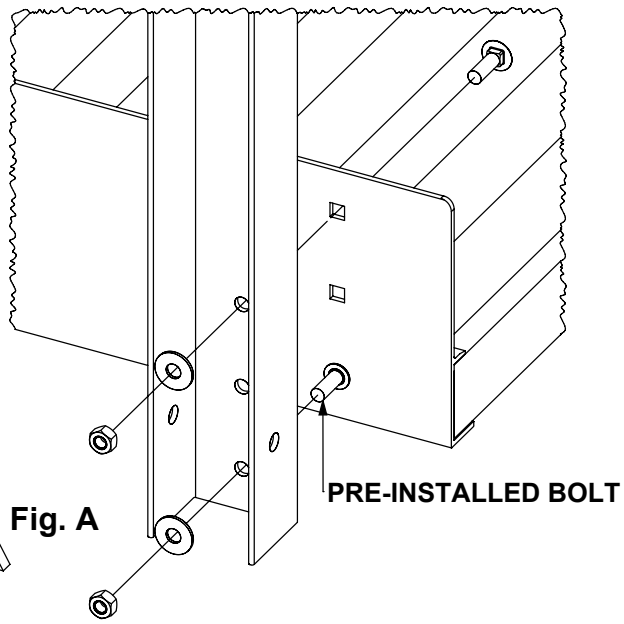

Fig. A

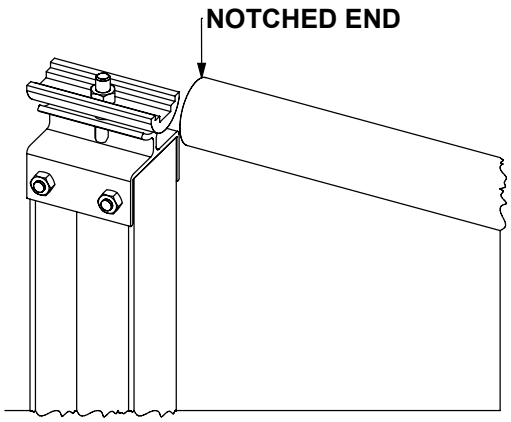

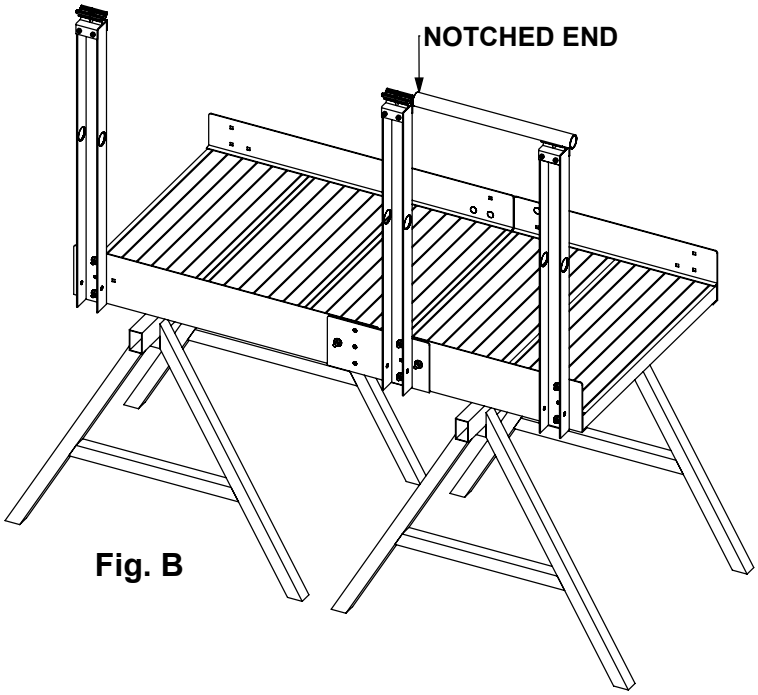

Fig. B

SECTION 4: RAMP ASSEMBLY

4.2 RAMP HANDRAIL ASSEMBLY (Continued): With the correct tube in hand, place the unnotched end of the tube in the saddle of the first handrail post assembly that is securely tightened.(Fig.C) Be sure the tube is between the saddle and the saddle handrail splice and pressed all the way against the hardware. Tighten the saddle handrail splice down. Take the notched end of the handrail tube and place it in the saddle of the second post. Again, being sure it is between the saddle and the saddle handrail splice. Do not tighten down. The rest of the sections of the ramp run will be single post sections. Continue attaching the top handrail down the ramp in the same way as you did the first with the corresponding handrail tube length for each section. Insert the middle handrail tube, that is the same as the top tube, by sliding it into the hole in the handrail post assembly, placing a handrail splice in the end. Attach the next handrail post assembly at the end of the next ramp section and repeat this process all the way down the ramp, inserting the corresponding handrail tubes for each section. After each top handrail tube is inserted into the saddle and butted together, tighten handrail splice hardware all the way. Tighten down the handrail splice connecting the middle handrail together.(Fig.D) At the top end of the ramp, attach the required end loop into the saddle and through the middle hole in the handrail post assembly.(Fig.E)

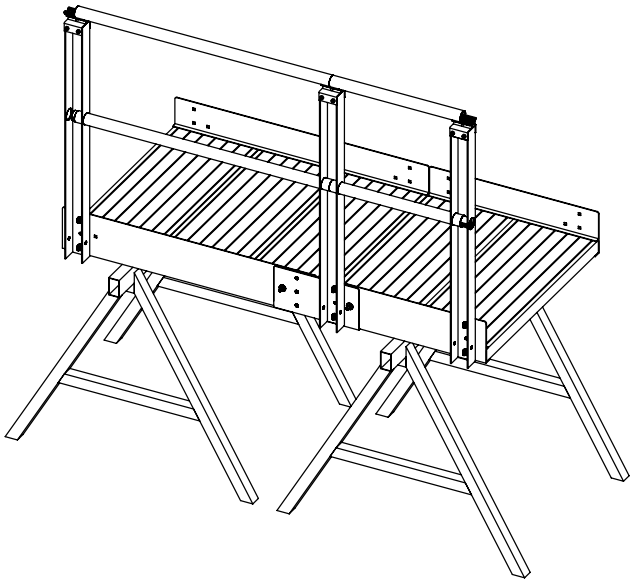

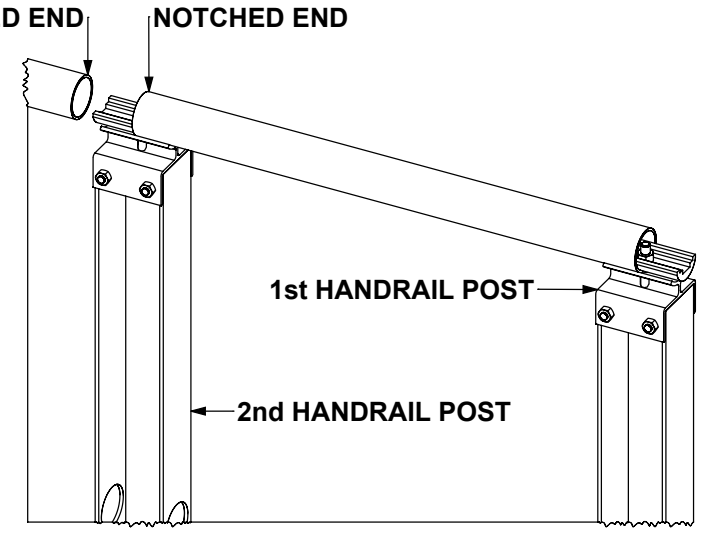

Fig. C

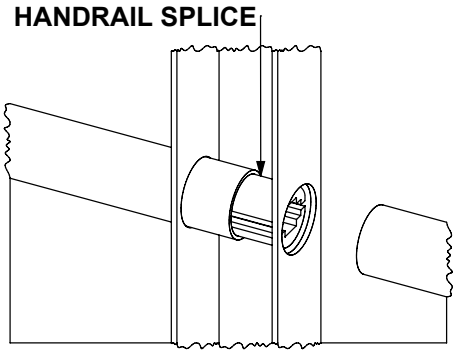

Fig. D

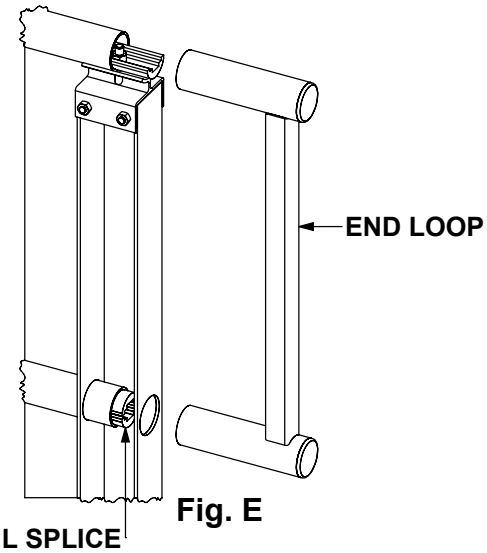

Fig. E

SECTION 4: RAMP ASSEMBLY

4.3 ENTRANCE BASE ASSEMBLY: Attach entrance base at the bottom end of ramp run using a left and right entrance splice. Place carriage bolt through the slotted holes on the entrance base, and the single/outside hole location on the ramp base and entrance splice.(Fig.F) **DO NOT TIGHTEN HARDWARE UNTIL THE END OF THE NEXT STEP.**

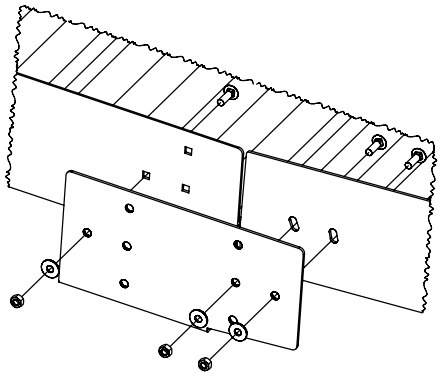

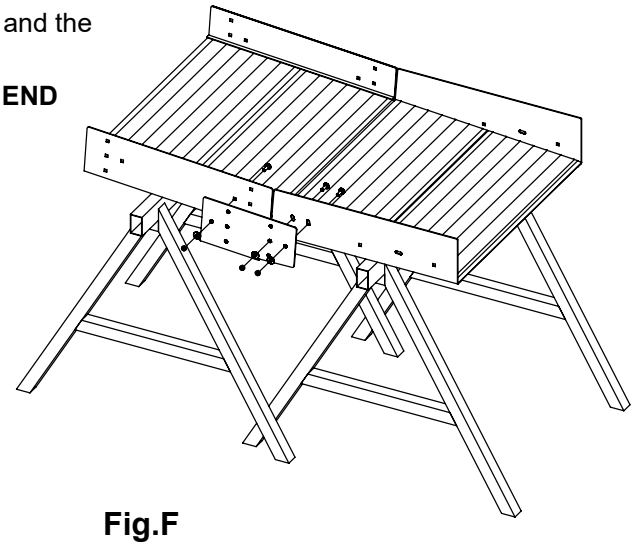

Fig.F

4.4 ENTRANCE HANDRAIL ASSEMBLY: To attach entrance handrail, locate the entrance handrail tubes that are 19 1/8". At the handrail post located next to the entrance, loosen the saddle handrail splice.(Fig.G) Place the end with the notch in between the saddle and the saddle handrail splice and press all the way against the hardware. Tighten down saddle handrail splice.

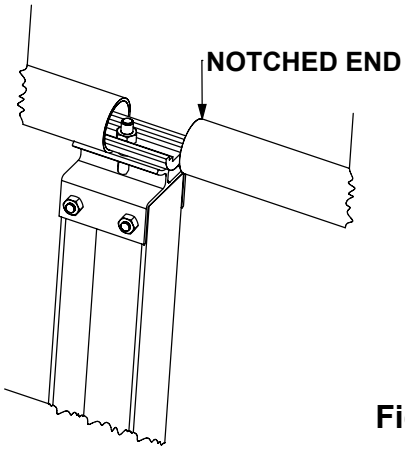

Fig.G

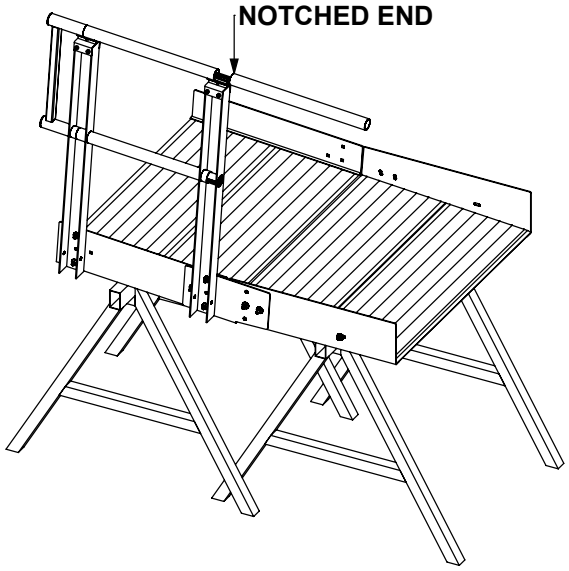

SECTION 4: RAMP ASSEMBLY

4.4 ENTRANCE HANDRAIL ASSEMBLY: (Continued) Next attach the handrail post to the end of the entrance with a carr. bolt, flat washer, and selflock nut. (Fig.H) DO NOT TIGHTEN ALL THE WAY DOWN. Place the end of the entrance handrail in between the saddle handrail splice and the saddle and tighten down the handrail splice. Next insert the middle handrail tube that is the same length as the top as described in section 4.2. At the top end of the ramp, attach the required end loop into the saddle and through the middle hole in the handrail post assembly.(Fig.I)

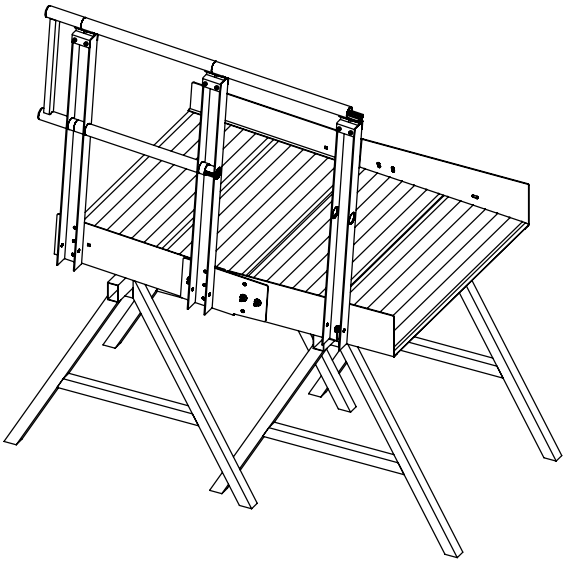

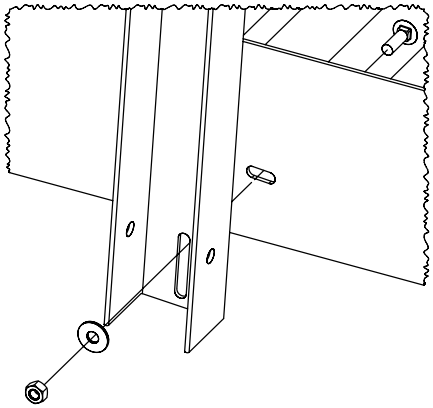

Fig.H

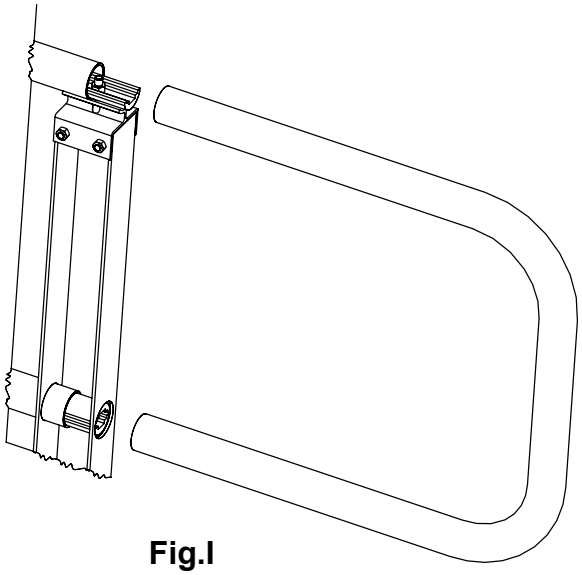

Fig.I

SECTION 4: RAMP ASSEMBLY

4.6 RAMP LEG ASSEMBLY: Attach legs by placing the leg attachment channel over handrail post align the holes and attach using a hex bolt, flat washer, and selflock nut. To adjust the height, loosen the two selflock nuts on the front side of the leg assembly, once height is set re-tighten selflock nuts.

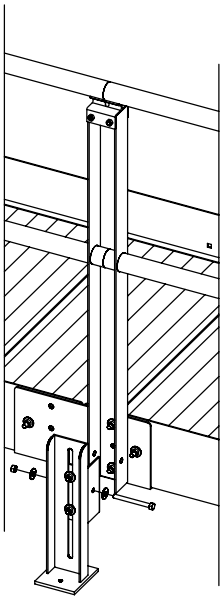

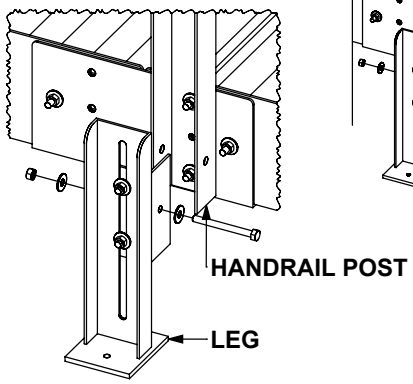

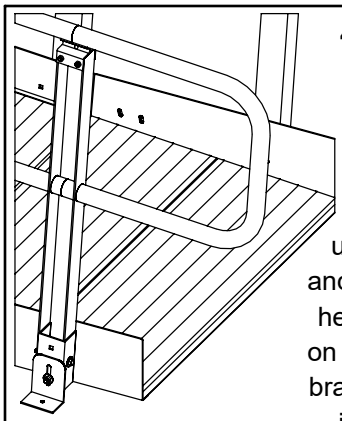

4.7 ENTRANCE SUPPORT BRACKET ASSEMBLY: Attach support brackets by placing the leg attachment channel over handrail post align the holes and attach using a hex bolt, flat washer, and selflock nut. To adjust the height, loosen the selflock nut on the front side of the support bracket assembly, once height is set re-tighten selflock nut.

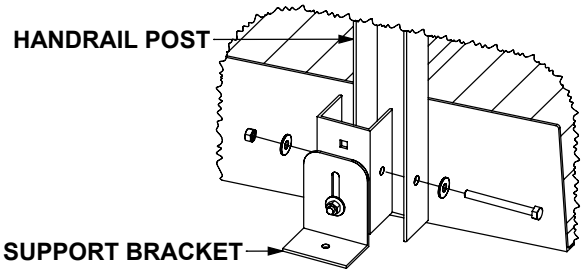

4.8 LONG LEG SUPPORT RAMP ASSEMBLY: Any ramp run exceeding a rise of 26” will require long leg supports. Attach a long leg support strap to the front and back side of each leg using the holes in the ramp leg with a flange bolt, flat washer, and selflock nut.

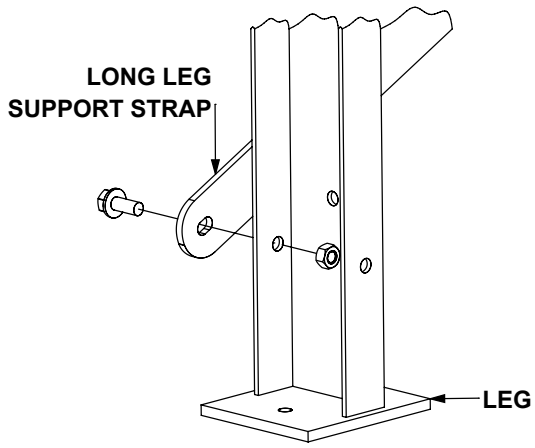

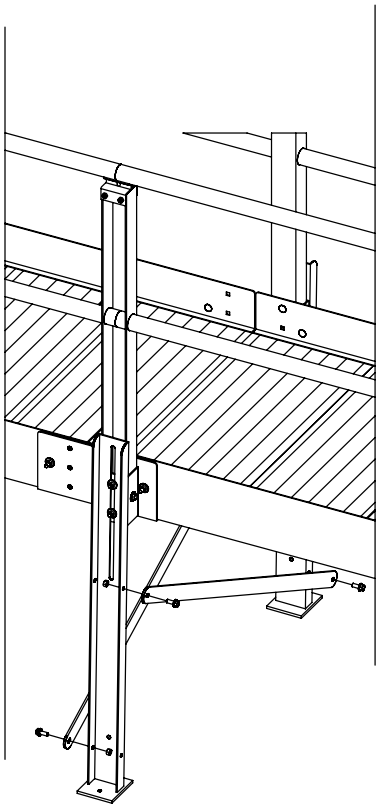

SECTION 5: OPTIONAL PARTS

5.1 ANGLE WEDGE LANDING ASSEMBLY: Attach handrail by placing carriage bolts through the square holes of the wedge base and handrail post, fasten with flat washers and selflock nuts. To attach rear legs, place the leg attachment channels over the handrail post align the holes and attach using hex bolts, flat washers, and selflock nuts. To attach front leg place carriage bolts through the square holes of the wedge base and the slotted hole of the leg and fasten with flat washers, and selflock nuts. Attach the ramp attachment clip to the base by placing the attachment clip on the inner lip of the wedge base align holes and fasten with carriage bolts, flat washers, and selflock nuts.

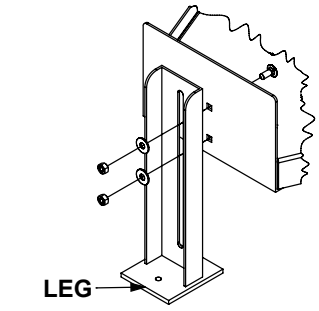

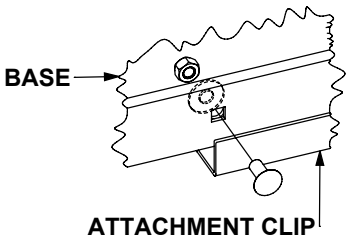

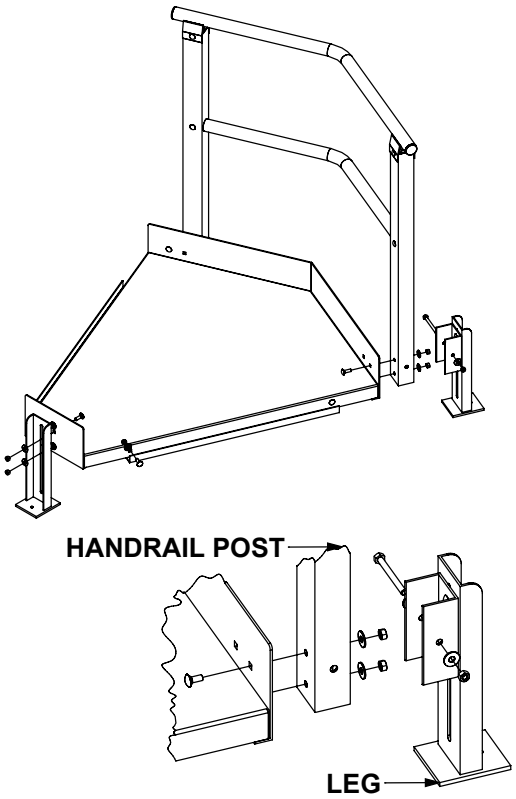

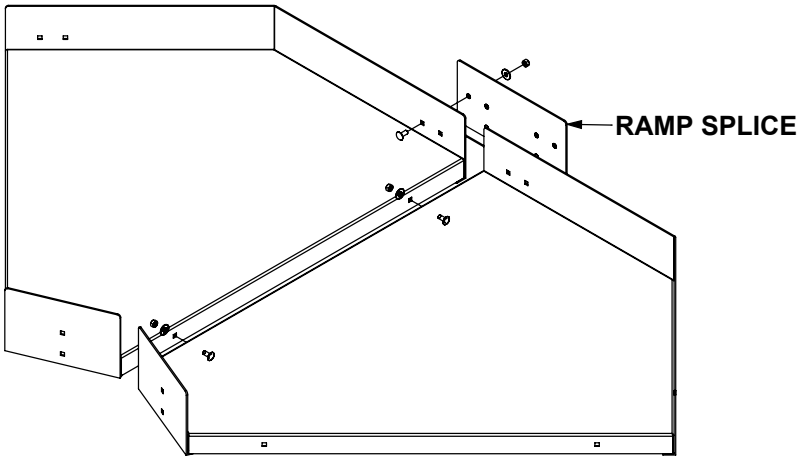

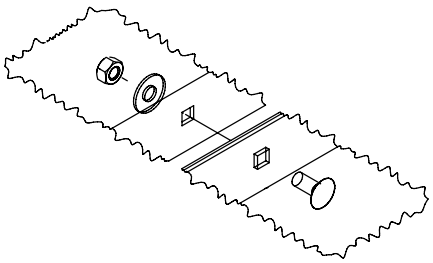

5.2 MULTIPLE ANGLE WEDGE LANDING ASSEMBLY: Multiple angle wedge bases can be attached to make a variety of turns in various directions with a decreased foot print. To attach angle wedge bases together set side by side and align the two square holes on the side of the bases fasten with carriage bolts, flat washers, and selflock nuts. Use a ramp splice at the outer seam to connect the bases fasten with carriage bolts, flat washers, and selflock nuts. To splice handrail together remove plastic cap and insert a handrail splice to tie handrail together. Attach legs as shown above *(see section 5.1).*

SECTION 5: OPTIONAL PARTS

5.3 LANDING TRANSITIONS: LANDING TRANSITIONS ARE USED WHEN THE ENTRANCE/DOOR OFF OF THE TOP PLATFORM REQUIRES A LEVEL BRIDGE FROM THE PLATFORM TO DOOR. LANDING TRANSITIONS ARE ONLY TO BE USED AT MINIMAL HEIGHTS, AND WILL ALWAYS BE LEVEL.

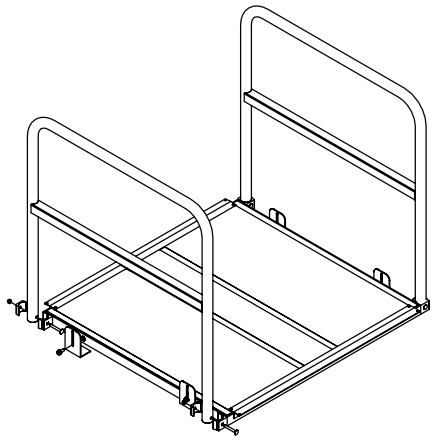

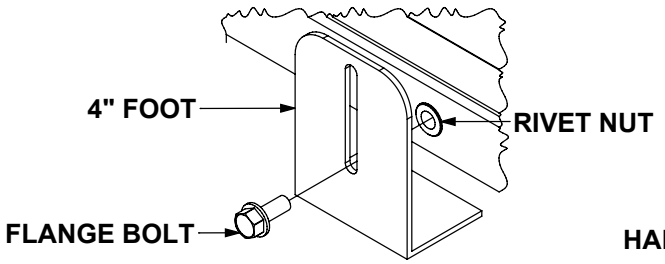

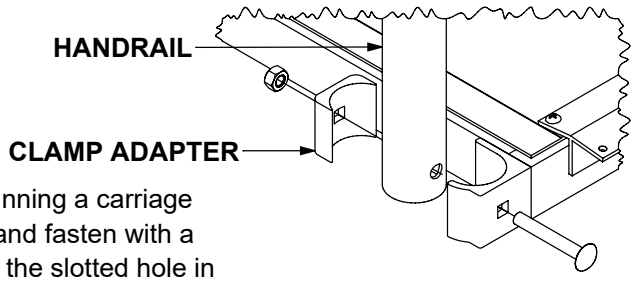

5.3 LANDING TRANSITION: Attach handrail to base by running a carriage bolt through the clamp base, handrail, and clamp adapter and fasten with a selflock nut. Attach two 4" feet on each side of base using the slotted hole in the 4" foot by threading a flange bolt into the pre-installed rivet nut. Center an upper "T" at both ends of base and zip screw to base.

5.4 LANDING PADS: LANDING PADS ARE USED WHEN BOTTOM RAMP ENDING SURFACE IS NOT SUITABLE FOR ACCESSING THE BOTTOM RAMP OF A MODULAR RAMP SYSTEM. IT IS NOT RECOMMENDED TO USE THIS AS THE ONLY ANCHOR POINT FOR THE BOTTOM OF THE RAMP.

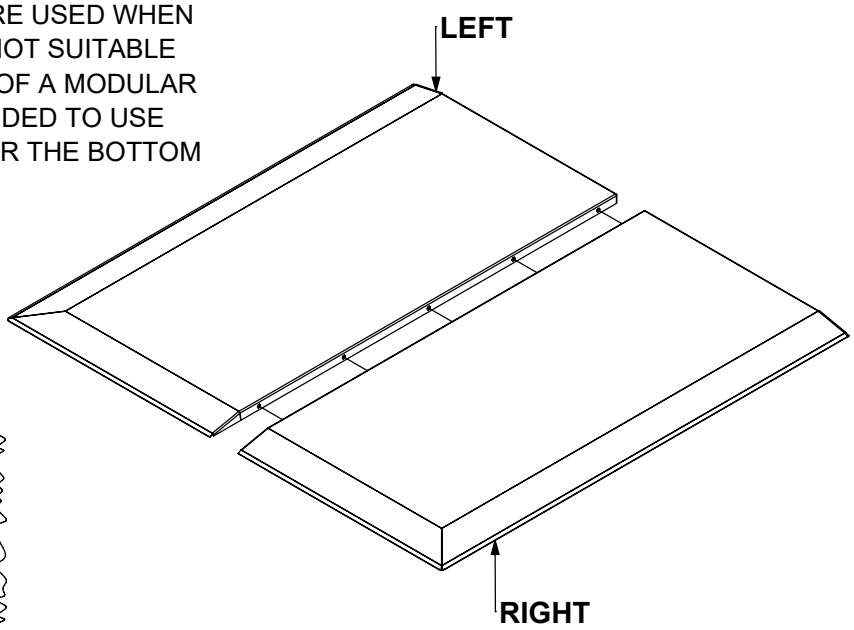

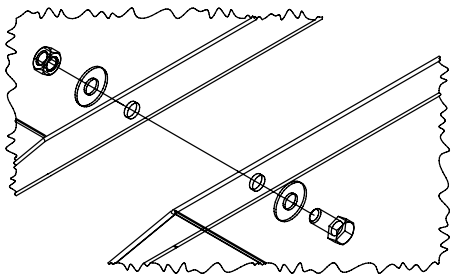

5.4 LANDING PAD ASSEMBLY: Landings pads are made in two pieces a left & right. Place the two sections upside down on a flat surface and fasten with a hex bolt, flat washer, and selflock nut.

SECTION 5: OPTIONAL PARTS

5.5 LANDING HURRICANE KIT ASSEMBLY: Landings requiring hurricane tiedowns will require a tiedown on all four corners of base. To properly locate anchor locations, the entire ramp system will need to be fully assembled in its final resting place. It may be necessary to temporarily reposition components to install ground anchors. Tie landing to ground anchors by making a loop around the hex bolt used to attach the leg to the handrail post secure with a wire clamp, run opposite end through the eye of the ground anchor and secure with wire clamp. Trim excess wire and tape ends with electrical to keep wire from fraying.

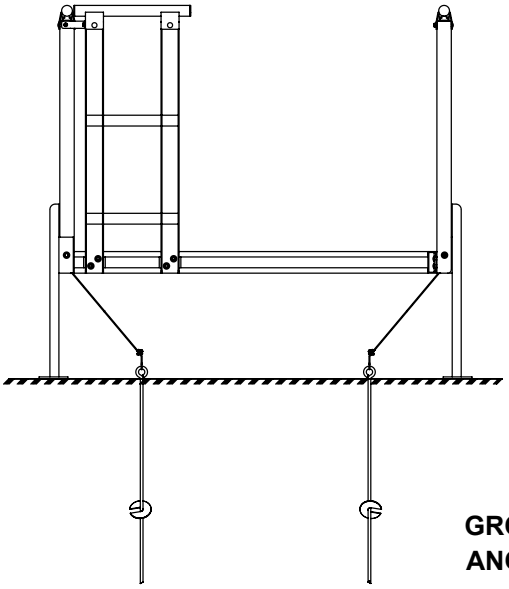

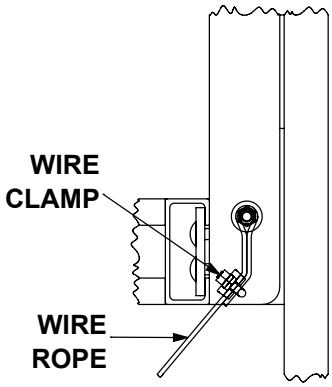

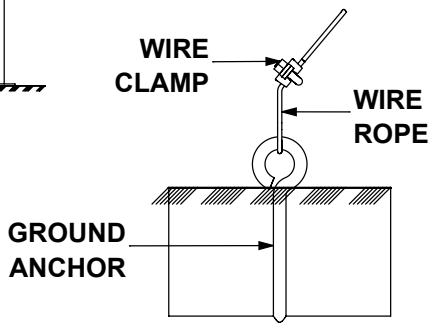

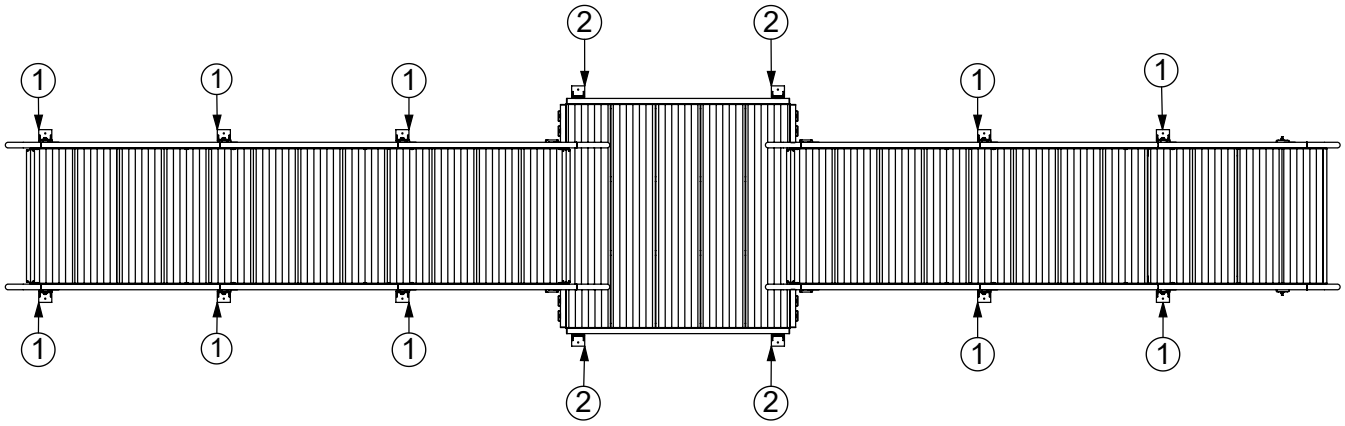

① RAMP LOCATIONS ② LANDING LOCATIONS

!!!WARNING!!! PRIOR TO INSTALLING THE ANCHORS INTO THE GROUND, ENSURE THAT ANY UNDERGROUND ELECTRICAL CONDUCTORS, NATURAL GAS LINES, WATER/DRAIN LINES AND/OR ANY OTHER INTERFERENCES ARE LOCATED AND WILL NOT HINDER THE INSTALLATION.

!!!WARNING!!! DO NOT USE CONCRETE ANCHORS IN ASPHALT. ASPHALT IS NOT CONSIDERED A SUITABLE ANCHORING SURFACE. IF INSTALLING ON ASPHALT, HOLES WILL HAVE TO BE MADE IN THE ASPHALT, AND THE ANCHOR AUGER INSTALLED DIRECTLY INTO THE GROUND.

!!!WARNING!!! REGULARLY INSPECT INSTALLATION FOR ANY LOOSE WIRE, FASTENERS, AUGER ANCHORS, ETC.

SECTION 5: OPTIONAL PARTS

5.6 RAMP HURRICANE KIT ASSEMBLY:
Ramps requiring hurricane tiedowns will require a tiedown at each end of the ramp run on both sides. On ramp runs ending at the ground a tiedown will be needed at the top end and the lowest leg locations. To properly locate anchor locations, the entire ramp system will need to be fully assembled in its final resting place. It may be necessary to temporarily reposition components to install ground anchors. Tie ramp run to ground anchors by making a loop around the hex bolt used to attach the leg to the handrail post secure with a wire clamp, run opposite end through the eye of the ground anchor and secure with wire clamp. Trim excess wire and tape ends with electrical to keep wire from fraying.

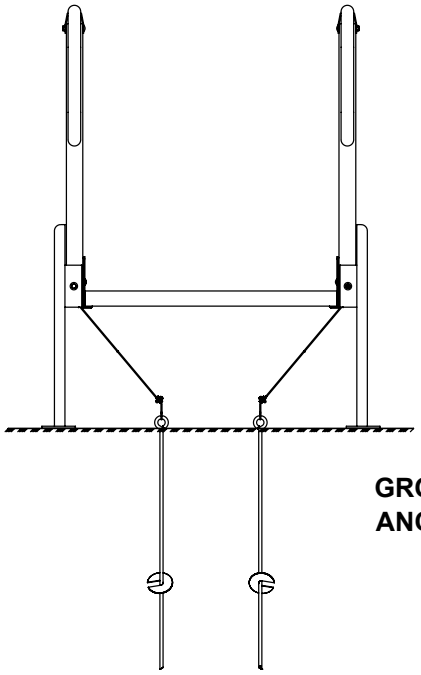

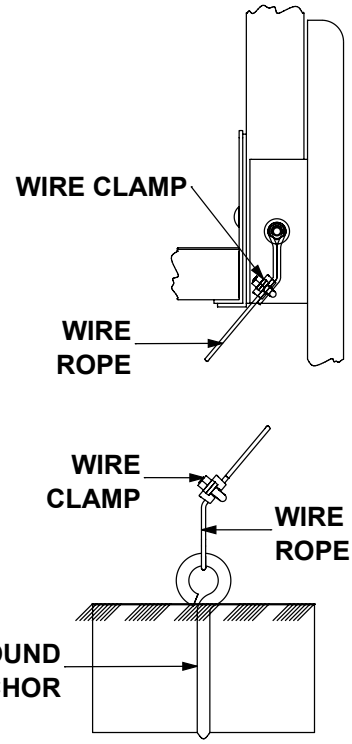

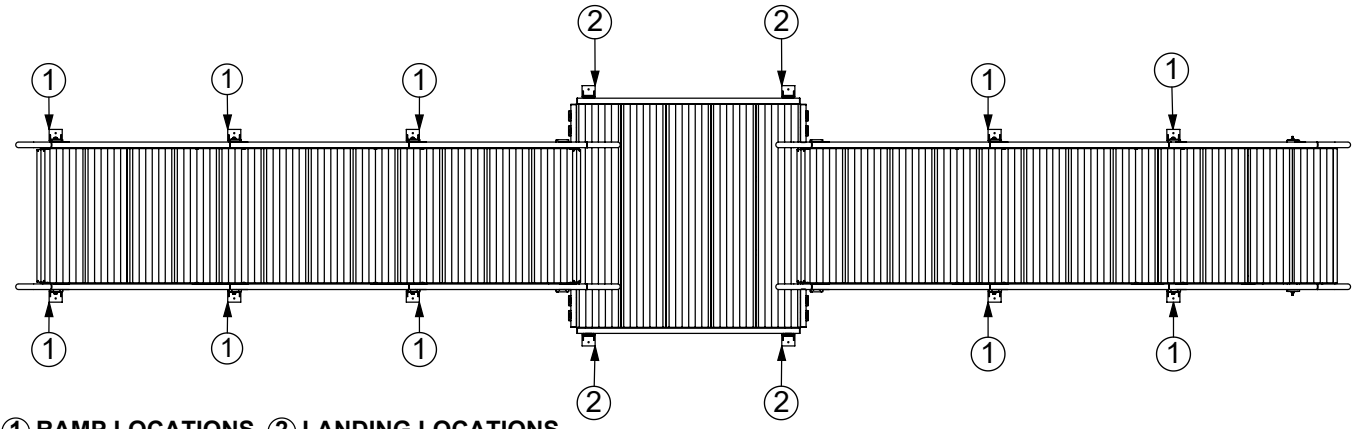

① RAMP LOCATIONS ② LANDING LOCATIONS

!!!WARNING!!! PRIOR TO INSTALLING THE ANCHORS INTO THE GROUND, ENSURE THAT ANY UNDERGROUND ELECTRICAL CONDUCTORS, NATURAL GAS LINES, WATER/DRAIN LINES AND/OR ANY OTHER INTERFERENCES ARE LOCATED AND WILL NOT HINDER THE INSTALLATION.

!!!WARNING!!! DO NOT USE CONCRETE ANCHORS IN ASPHALT. ASPHALT IS NOT CONSIDERED A SUITABLE ANCHORING SURFACE. IF INSTALLING ON ASPHALT, HOLES WILL HAVE TO BE MADE IN THE ASPHALT, AND THE ANCHOR AUGER INSTALLED DIRECTLY INTO THE GROUND.

!!!WARNING!!! REGULARLY INSPECT INSTALLATION FOR ANY LOOSE WIRE, FASTENERS, AUGER ANCHORS, ETC.

PRAIRIE VIEW INDUSTRIES, INC.
LIMITED WARRANTY

1. LIMITED LIFETIME WARRANTY-THE FOLLOWING APPLIES TO ALL END PURCHASERS OTHER THAN RESIDENTS OF THE STATE OF CALIFORNIA*:

PRAIRIE VIEW INDUSTRIES, INC. warrants to the original end purchaser of the product is free from defects in material and workmanship under normal use and service. This warranty does not apply to any product that has been subject to misuse, abuse, neglect, alteration, accident, usage not in accordance with the product instructions, acts of God, or improper installation or that has been used for rental purposes or repaired by someone other than PRAIRIE VIEW INDUSTRIES, INC. This warranty does not cover normal deterioration of the product due to wear and exposure.

*(FIVE YEAR WARRANTY-FOLLOWING APPLIES TO RESIDENTS OF THE STATE OF CALIFORNIA: For a period of five years after the purchase of the product by the original end purchaser of the product, PRAIRIE VIEW INDUSTRIES, INC. warrants to the original end purchaser of the product that the product is free from defects in material and workmanship under normal use and service. This warranty does not apply to any product that has been subject to misuse, abuse, neglect, alteration, accident, usage not in accordance with product instructions, acts of God, or improper installation or that has been used for rental purposes or repaired by someone other than PRAIRIE VIEW INDUSTRIES, INC. This warranty does not cover normal deterioration of the product due to wear and exposure.)

2. This warranty is limited to repairing or replacing, at the option of PRAIRIE VIEW INDUSTRIES, INC., any product that is returned to PRAIRIE VIEW INDUSTRIES, INC. and is reasonably determined by PRAIRIE VIEW INDUSTRIES, INC. to be defective. The repair or replacement of a defective product under this warranty will be made by PRAIRIE VIEW INDUSTRIES, INC. without charge of parts or labor. This excludes shipping or delivery charges to and from PRAIRIE VIEW INDUSTRIES, INC.'S place of business. If the product has been discontinued, PRAIRIE VIEW INDUSTRIES, INC. may replace the product with a new product of comparable value and function. PRAIRIE VIEW INDUSTRIES, INC. also reserve the right to refund the purchase price its exclusive warranty remedy.

3. Any claim alleging that the product fails to conform to this warranty may be made only by the original end purchaser and only while such purchaser owns the product. A defective product that is covered by this warranty must be returned, at the purchaser's expense, along with proof of dated of original purchase (such as receipt, check or other document PRAIRIE VIEW INDUSTRIES, INC. deems acceptable that shows the date of purchase and the identity of the product purchaser), along with a description of the alleged defect, to PRAIRIE VIEW INDUSTRIES INC., 2620 Industrial Drive, Fairbury, Nebraska 68352.

4. EXCEPT AS SET FORTH HEREIN, PRAIRIE VIEW INDUSTRIES, INC. MAKES NO WARRANTIES, EXPRESSED OR IMPLIED, AND PRAIRIE VIEW INDUSTRIES, INC. DISCLAIMS AND NEGATES ALL OTHER WARRANTIES, INCLUDING WITHOUT LIMITATION, IMPLIED WARRANTIES OF MERCHANTABILITY, FITNESS FOR ANY PARTICULAR PURPOSE, CONFORMITY TO MODELS OR SAMPLES, OR ANY WARRANTIES OR ANY WARRANTIES OR ANY WARRANTIES OR INDEMNITIES AGAINST INTELLECTUAL PROPERTY INFRINGEMENT.

SOME STATES DO NOT ALLOW LIMITATIONS ON IMPLIED WARRANTIES, SO THESE LIMITATIONS MAY NOT APPLY TO YOU. IN NO EVENT WILL PRAIRIE VIEW INDUSTRIES, INC. BE LIABLE FOR ANY INDIRECT, SPECIAL, INCIDENTAL, OR CONSEQUENTIAL DAMAGES OR FOR ANY LIABILITY MORE THAN THE PURCHASE PRICE OF THE PRODUCT.

5. Before using the product, the purchaser must first determine the suitability of the product for its intended use, and the purchaser assumes all risk and liability whatsoever in connection there with.

6. No person, agent, distributor, dealer or company is authorized to change, amend or modify the terms of this warranty.

7. This warranty gives the purchaser specific legal rights, and the purchaser may also have other rights that vary from state to state.

8. The purchaser may not assign the purchaser's rights or obligations under this warranty without the prior written consent of PRAIRIE VIEW INDUSTRIES, INC.