PRAIRIE VIEW INDUSTRIES

MODULAR GATE ASSEMBLY

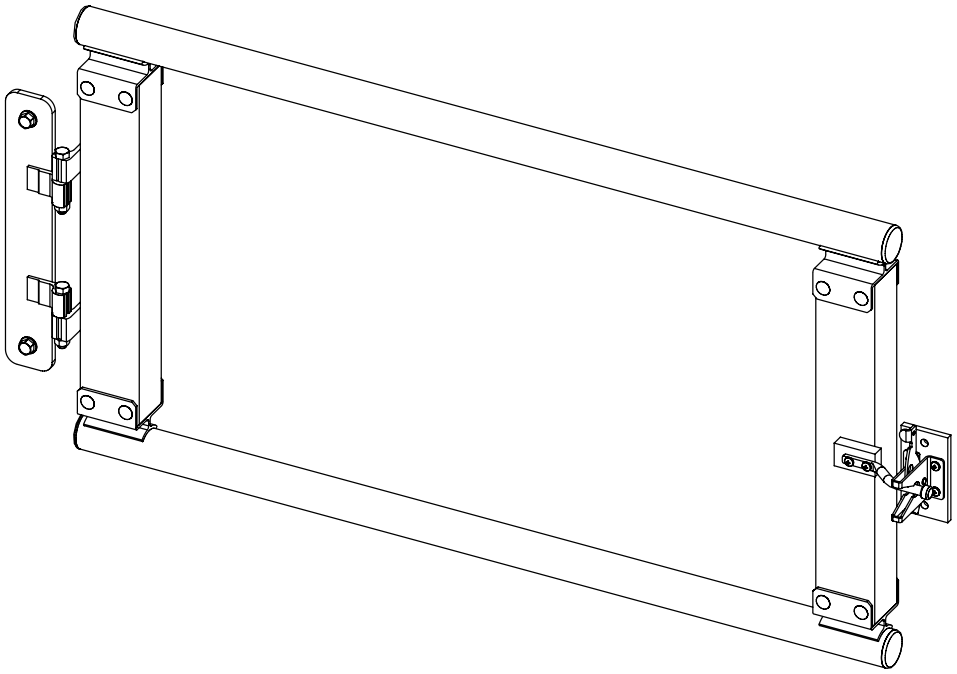

Prairie View Industries, Inc. Phone: 800-554-7267 | Email: info@pviramps.com | www.pviramps.com

XP3-GATE : PARTS

GATE ASSEMBLY

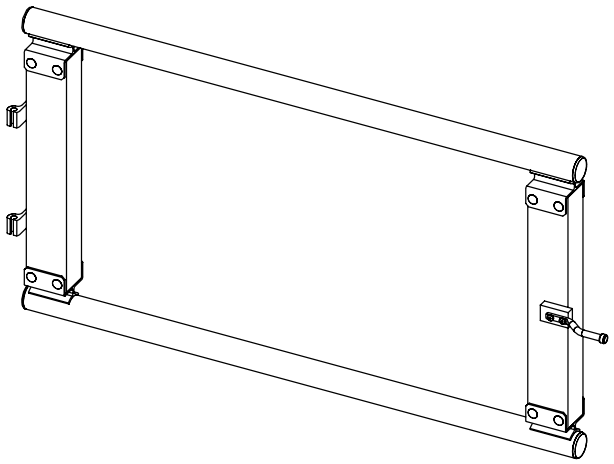

RAMP GATE: 34.50"
LANDING GATE: 43.75"

GATE BRACKET

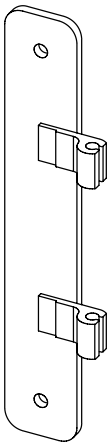

GATE LATCH

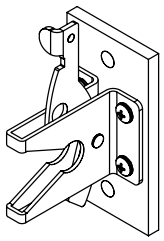

HARDWARE

5/16x3/4 FLANGE BOLTS
5/16x2-1/2 HEX BOLT
5/16 SELFLOCK NUT
5/16 WASHER
10/32x3/8 MACHINE SCREW
LATCH ROD

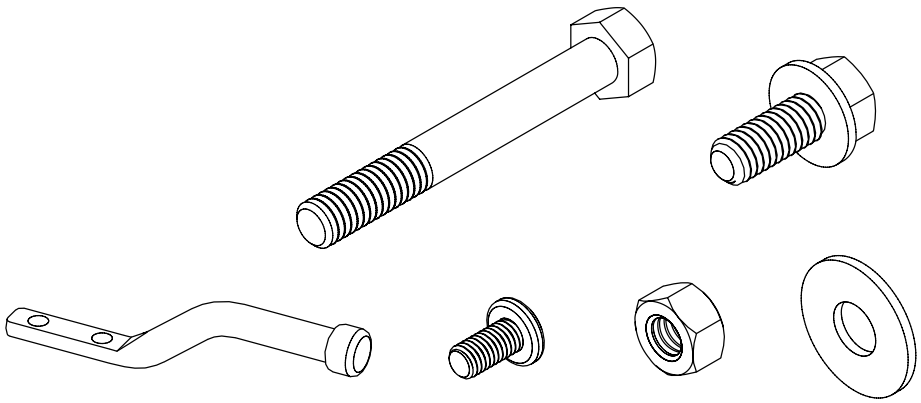

XP3-RAMP GATE : ASSEMBLY

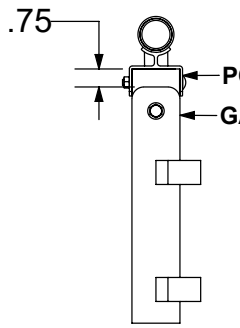

FIG.1A

STEP 1: Locate gate bracket ¾" of an inch from the top and flush on the edge of the post (FIG.1A). Mark and drill holes in post with a 5/16 drill bit and fasten with 5/16x3/4 flange bolts, 5/16 flat washers, and 5/16 selflock nuts (FIG.1B).

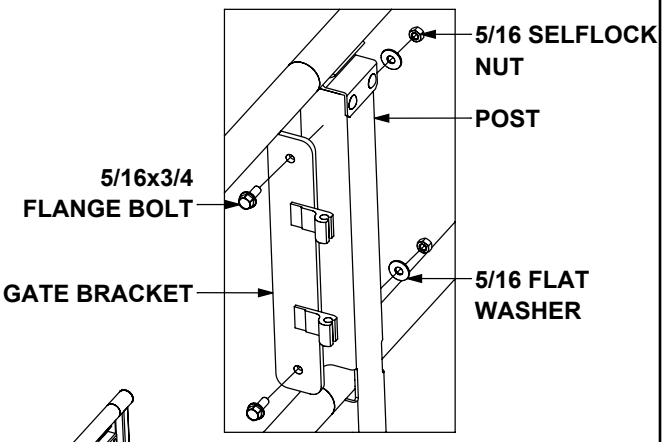

FIG.1B

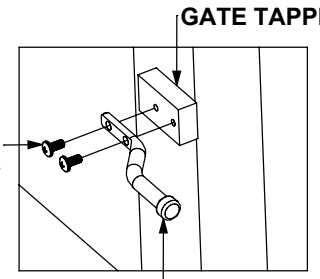

FIG.1C

STEP 2: Fasten the latch rod to the gate assembly tapped block using 10/32x3/8 machine screws (FIG.1C). Attach gate assembly to the gate bracket using 5/16x2 ½ hex bolts and 5/16 selflock nuts (FIG.1D).

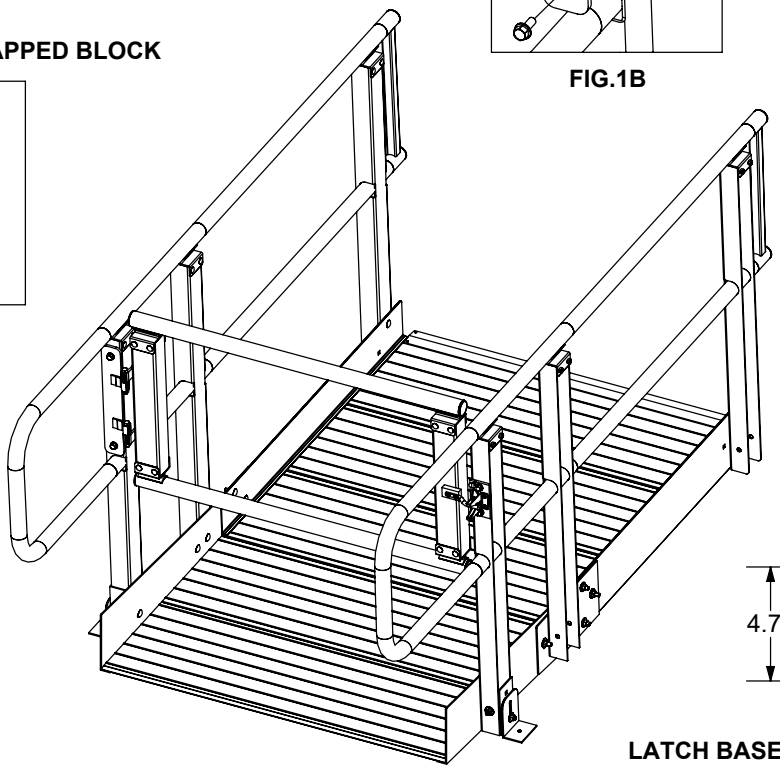

FIG.1E

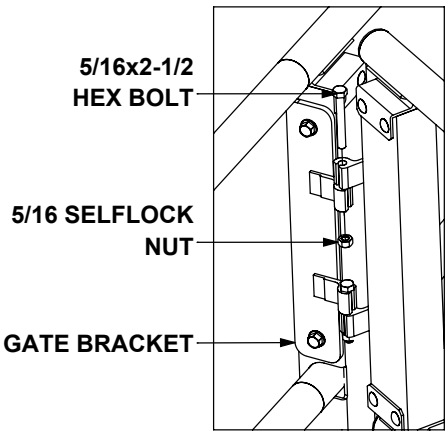

FIG.1D

STEP 3: Locate the latch base 4 ¾" of an inch from the top and flush on the edge of the post (FIG.1E). Check gate fit before marking and drilling holes with a 5/16 drill bit in the post. Fasten latch base to post with 5/16x ¾ flange bolts, 5/16 flat washers, and 5/16 selflock nuts (FIG.1F).

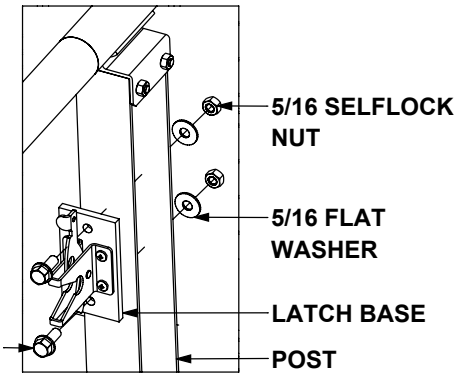

FIG.1F

XP3-LANDING GATE : ASSEMBLY

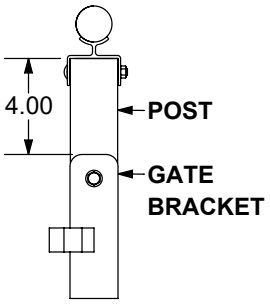

FIG.2A

STEP 1: Locate gate bracket 4 inches from the top and flush on the edge of the post (FIG.2A). Mark and drill holes with a 5/16 drill bit in the post and fasten with 5/16 x ¾ flange bolts, 5/16 flat washers, and 5/16 selflock nuts (FIG.2B).

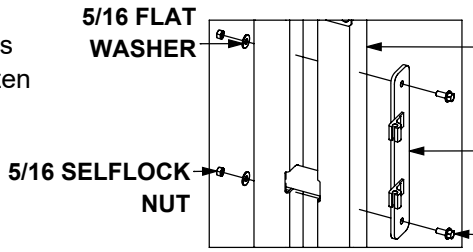

FIG.2B

STEP 2: Fasten the latch rod to the gate assembly tapped block using 10/32x3/8 machine screws (FIG.2C). Attach gate assembly to the gate bracket using 5/16x2 ½ hex bolts and 5/16 selflock nuts (FIG.2D).

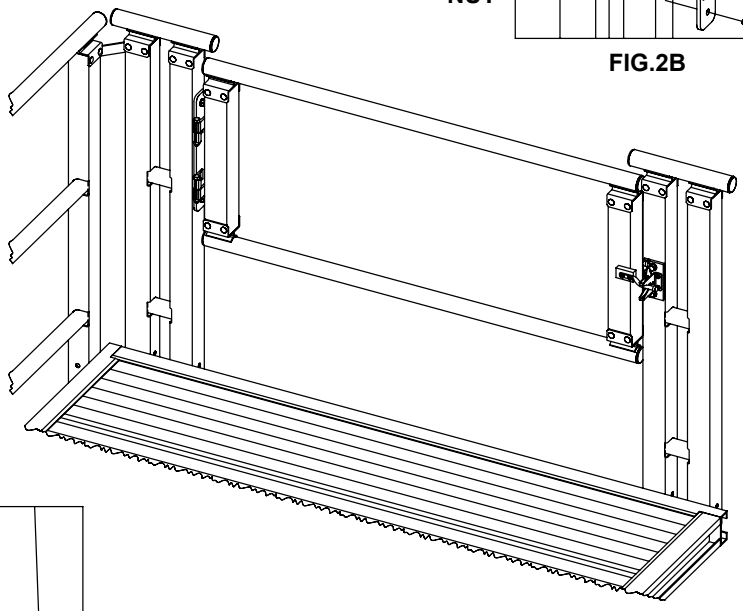

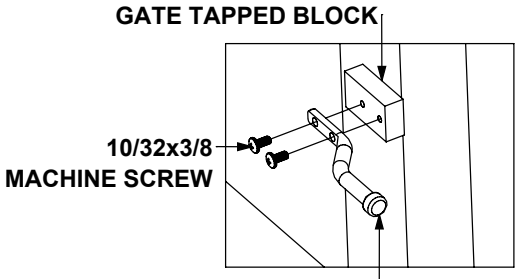

FIG.2C

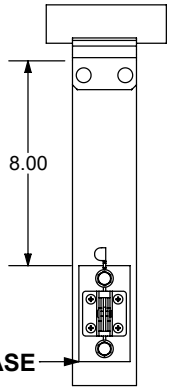

FIG.2E

STEP 3: Locate the latch base 8 inches from the top and flush on the edge of the post (FIG.2E). Check gate fit before marking and drilling holes in the post with a 5/16 drill bit. Fasten latch base to post with 5/16x ¾ flange bolts, 5/16 flat washers, and 5/16 selflock nuts (FIG.2F).

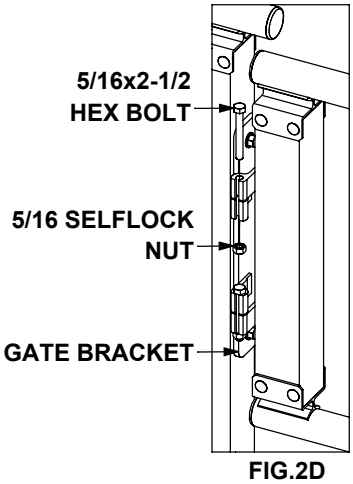

FIG.2D

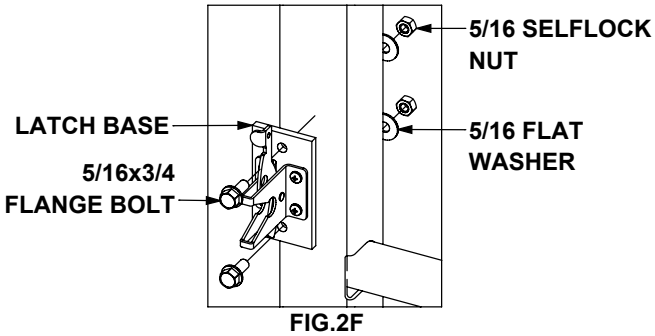

FIG.2F