PVI TrekAway SERIES

MT3000 & MT3100 - Hitch Mounted Carrier with Ramp



MT3000



MT3100

Owner's Manual

Specifications

- MT3000 has 4' ramp
- MT3100 has 6' ramp with side rails
- Made with steel underframe for greater weight capacity
- Platform and ramp are made of aluminum reducing weight and resists corrosion
- Professional powder coat black finish
- Non-skid tape on surface of ramp and platform for hassle free loading and unloading
- Can be used with most power wheelchairs and scooters
- Easy use of ramp for loading and unloading
- Ramp secures easily in folded and upright positions
- 350 lb. Load capacity
- Carrier weight: MT3000 - 70 lbs.; MT3100 - 90 lbs.
- No assembly required

Visit our website or call for a catalog, to see our full line of products.

Prairie View Industries, Inc. ◆ P.O. Box 575 ◆ Fairbury, NE 68352-0575
Phone 800-554-7267 ◆ Fax 402-729-4058 ◆ Email: info@pviramps.com ◆ www.pviramps.com

Please read owner's manual thoroughly before installing or using carrier.



- Failure to follow instructions could result in injury or damage of property.
- Refer to vehicle owner's manual for specific tongue weight capacity.
- Do NOT exceed recommended vehicle tongue weight.
- Calculate total weight on vehicle hitch by adding weight of carrier (MT3000 - 70 lbs.; MT3100 - 90 lbs.) and scooter/power chair weight together.
- Do NOT use carrier if any pieces are missing.
- Do NOT stand on carrier.
- Do NOT ride scooter, power chair or any vehicle when loading.
- When carrier is not in use always have ramp in folded position (shown on page 5).
- Always hold handle or ramp railing while moving Ramp.
- Pictures in manual are used for illustrational purposes; your product may look slightly different.

Prairie View Industries, Inc. ◆ P.O. Box 575 ◆ Fairbury, NE 68352-0575
Phone 800-554-7267 ◆ Fax 402-729-4058 ◆ Email: info@pviramps.com ◆ www.pviramps.com

MT3000 - Hitch Mounted Carrier With Ramp

Parts List



Hitch Attachment Tube

5/8” x 3 1/2” Hex Bolt x 2

5/8” Lock Nut x 2

5/8” Washer x 4

Hitch Pin

Cotter Pin x 2

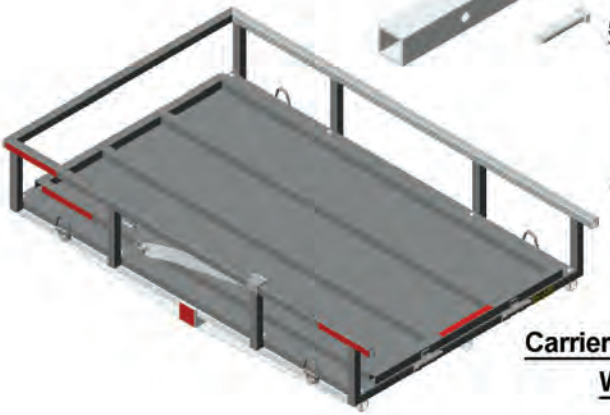

Carrier Base Assembly With Ramp

MT3100 - Hitch Mounted Carrier With Ramp

Parts List



Hitch Attachment Tube

5/8" x 3 1/2" Hex Bolt x 1

5/8" Lock nut x 1

5/8" Washer x 2

Hitch Pin

Cotter Pin x 3

Quick Release Pin x 2



Carrier Base Assembly With Ramp

Preparation for Installation



Attaching Tube: **Stand carrier up on its side. Insert hitch attachment tube into carrier and attach with 5/8" x 3 1/2" hex bolt with washers** and **lock nut.**

Prairie View Industries, Inc. ◆ P.O. Box 575 ◆ Fairbury, NE 68352-0575
Phone 800-554-7267 ◆ Fax 402-729-4058 ◆ Email: info@pviramps.com ◆ www.pviramps.com

Attach to hitch with included hardware.
Mounts to Class III and IV hitches.
Class II 1 1/4" hitch receiver requires Class II Hitch Adapter.

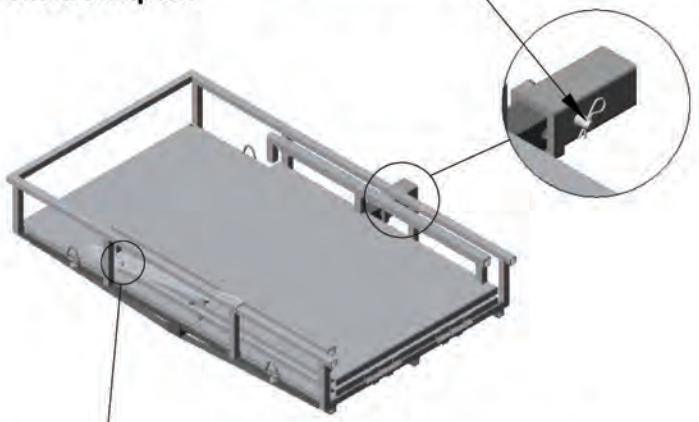

Folded Position

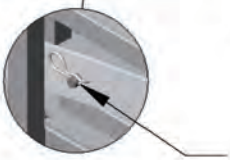

1 or 2 pins are required to secure locking arm to ramp in upright or folded positions.

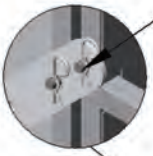

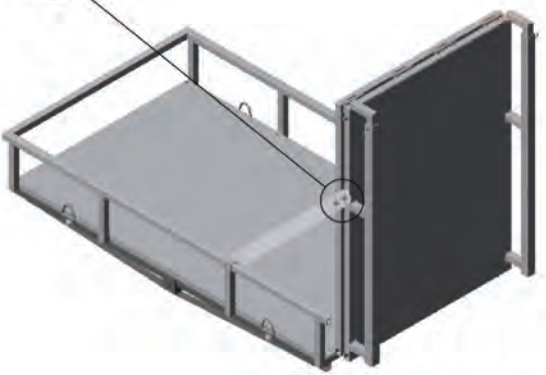

Upright Position

Carrier Usage

Loading Position

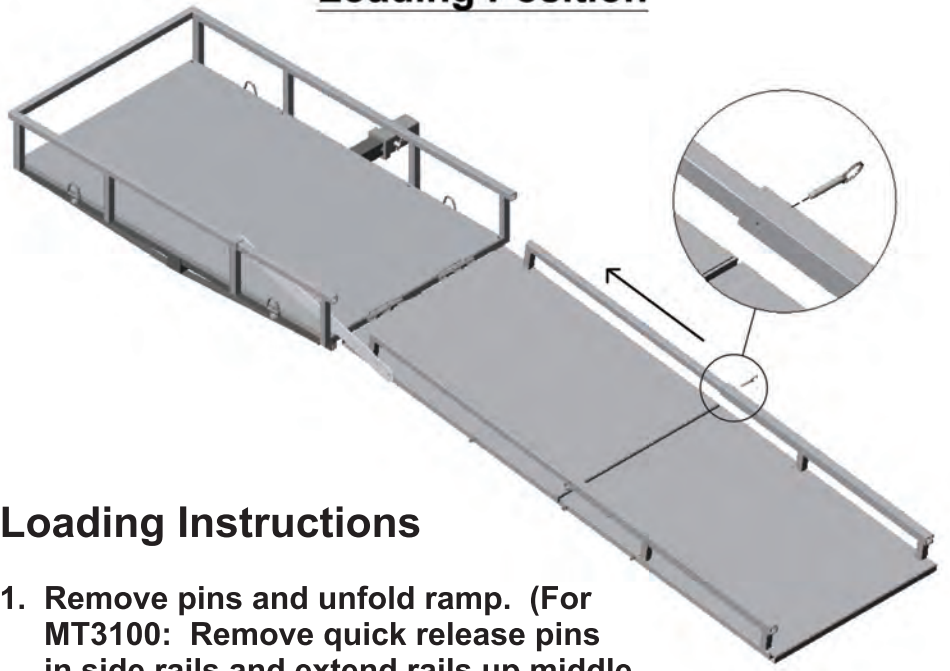

Loading Instructions

1. **Remove pins and unfold ramp. (For MT3100: Remove quick release pins in side rails and extend rails up middle ramp section. Replace pins when rails are fully extended, shown above.)**
2. **Load item. DO NOT ride on any equipment while loading and unloading. (For MT3100: Remove quick release pins in side rails and push down into tube. Replace pins to secure side rails.)**
3. **Fold up ramp to *upright position* (pg. 5) and secure locking arm to ramp sections with pins.**
4. **Secure equipment with straps. DO NOT haul items without securing them down.**
5. **Reverse steps to unload equipment.**

NOTE: DO NOT exceed load capacity. When empty always have ramp in *folded position* (pg. 5).

Prairie View Industries, Inc. ◆ P.O. Box 575 ◆ Fairbury, NE 68352-0575
Phone 800-554-7267 ◆ Fax 402-729-4058 ◆ Email: info@pviramps.com ◆ www.pviramps.com

Optional Items:



Mountable D-rings sold individually with hardware.

Retractable ratchet sold individually. Mounts to carrier.

Ratchet sold in sets of 4.

Instructions For Optional Hardware

Carrier Using D-Ring

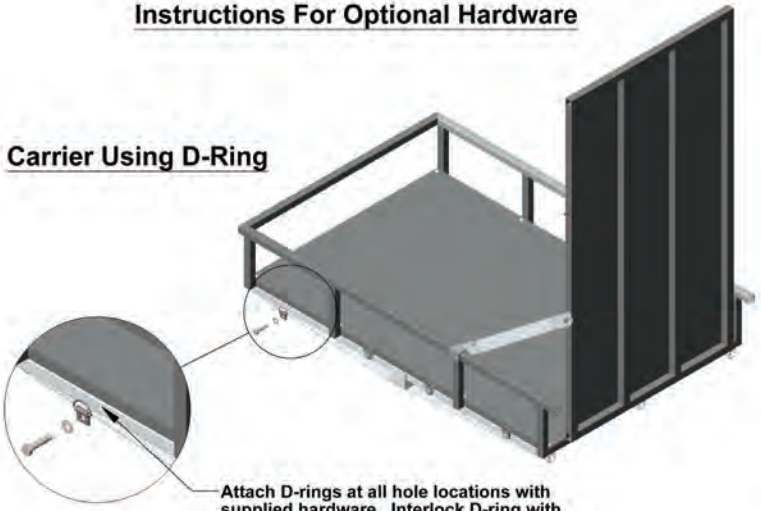

Attach D-rings at all hole locations with supplied hardware. Interlock D-ring with hook on ratchet to secure equipment to carrier.

Carrier Using Retractable Ratchet

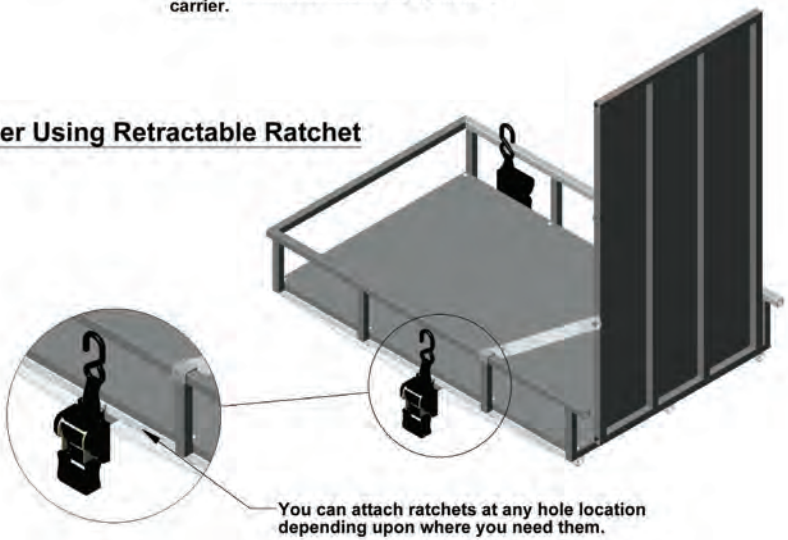

You can attach ratchets at any hole location depending upon where you need them.

PRAIRIE VIEW INDUSTRIES, INC.
ONE YEAR LIMITED WARRANTY

1. PRAIRIE VIEW INDUSTRIES, INC. warrants that the equipment is free from defects in material and workmanship under normal use and service. The provisions of this warranty shall not apply to any equipment which has been subject to misuse, negligence, alteration, accident or improper installation, or which shall have been repaired outside PRAIRIE VIEW INDUSTRIES, INC. place of business. The provisions of this warranty shall not apply to normal deterioration due to wear and exposure.

2. PRAIRIE VIEW INDUSTRIES, INC. obligation under this warranty is limited to repairing or replacing, at its option, any equipment which is returned to PRAIRIE VIEW INDUSTRIES, INC. place of business and which upon examination shall disclose to PRAIRIE VIEW INDUSTRIES, INC. reasonable satisfaction to have been thus defective. The repair or replacement of defective equipment under this warranty will be made by PRAIRIE VIEW INDUSTRIES, INC. without charge for parts or labor. This excludes shipping or delivery charges to or from PRAIRIE VIEW INDUSTRIES, INC. place of business.

3. The warranty is effective as of the date of sale to the original purchaser and extends for one year. Original purchaser must fill out and return the warranty card within 30 days after the date of sale or the warranty will be void.

4. Defective equipment that is covered by this warranty must be returned at the purchaser's expense along with proof of date of purchase (receipt, check or other document that shows the date of purchase and the identity of the equipment) to PRAIRIE VIEW INDUSTRIES, INC., 2620 Industrial Drive, Fairbury, NE 68352.

5. The duration of any implied warranty of merchantability or fitness for a particular purpose shall be limited in all respects to the duration of the limited warranty. This limited warranty shall be in lieu of any other express or implied warranty. Some states do not allow limitations on how long an implied warranty lasts, so the above limitation may not apply to you. PRAIRIE VIEW INDUSTRIES, INC. neither assumes nor authorizes any other person to assume for it any other liability in connection with PRAIRIE VIEW INDUSTRIES, INC. or the equipment.

6. The purchaser's sole and exclusive remedy against the seller shall be for the repair or replacement of defective equipment as provided above. No other remedy, including but not limited to, incidental or consequential damages for lost profits, lost sales, injury to property or any other incidental or consequential loss, shall be available to the purchaser. Some states do not allow the exclusion or limitation of incidental or consequential damages, so the above limitation or exclusion may not apply to you. Before using, user shall determine the suitability of the product for its intended use, and user assumes all risk and liability whatsoever in connection therewith.

7. This warranty gives you specific legal rights, and you may also have other rights which vary from state to state.

Prairie View Industries, Inc. ◆ P.O. Box 575 ◆ Fairbury, NE 68352-0575
Phone 800-554-7267 ◆ Fax 402-729-4058 ◆ Email: info@pviramps.com ◆ www.pviramps.com