PVI TrekAway SERIES

MT1000 - Tilting Platform Lift

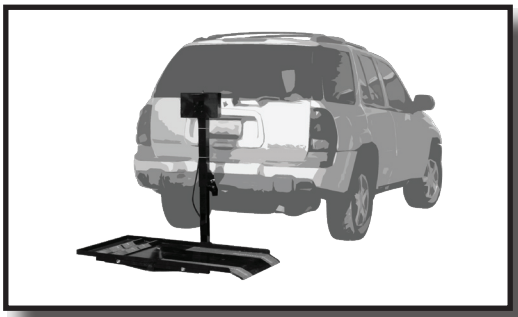

Owner's Manual

Specifications

- Made with a Steel Underframe for Greater Weight Capacity
- Aluminum Platform Provides Weight Savings and Corrosion Resistance
- Welded Construction for Superior Strength
- Platform Makes 45° Tilt for Lift Gate Clearance
- Tilt Feature Uses Less Material and Weighs Less Compared to Other Rear Vehicle Access Mechanisms
- Accommodates Scooters Up to 350 lbs.
- Front Wheels Fit on Chock Plate for Extra Stability
- Key Turns Motor On and Off
- Simple Up and Down Switch Operation
- Self Leveling Platform Made to Accommodate Varying Sloped Surfaces

Visit our website or call for a catalog, to see our full line of products.

Prairie View Industries, Inc. ◆ P.O. Box 575 ◆ Fairbury, NE 68352-0575
Phone 800-554-7267 ◆ Fax 402-729-4058 ◆ Email: info@pviramps.com ◆ www.pviramps.com

Please read owner's manual thoroughly before installing or using carrier.



- Failure to follow instructions could result in injury or damage of property.
- Refer to vehicle owner's manual for specific tongue weight capacity.
- Do NOT exceed recommended vehicle tongue weight.
- Calculate total weight on vehicle hitch by adding weight of platform lift (82 lbs.) and scooter/power chair weight together.
- Do NOT use platform lift if any pieces are missing.
- Do NOT stand on platform lift.
- Do NOT ride scooter or power chair while loading.
- Keep hands away from PINCH POINTS.
- Keep feet and any other objects out from under the platform while it is lowering.
- Scooter or power chair must be securely strapped down before driving.
- Do not move vehicle while platform lift is in **Loading Position** (refer to page 4).
- Platform lift only intended for scooter and power chair transportation. NOT intended for human transportation.
- When driving with your chair or scooter on the lift, slow down for pot holes, speed bumps, railroad tracks, etc. Platform lift could be damaged by abuse if subjected to excessive loads imposed by rough driving conditions.
- When carrier is not in use always have platform in **Folded Position** (shown on page 4).

Prairie View Industries, Inc. ◆ P.O. Box 575 ◆ Fairbury, NE 68352-0575
Phone 800-554-7267 ◆ Fax 402-729-4058 ◆ Email: info@pviramps.com ◆ www.pviramps.com

MT1000 - Hitch Mounted Carrier Lift

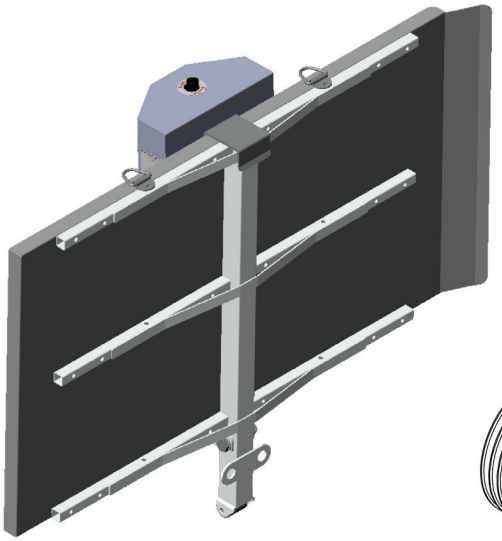



5/8" x 4" Hex Bolt x 1



5/8" Lock nut x 1



5/8" Washer x 2



Hitch Pin x 1



Cotter Pin x 1



Wiring Harness

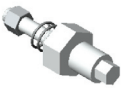

Hitch Pin Stabilizer



3/8" Wrench

Optional Items:



Retractable ratchet sold individually. Mounts to carrier.



Ratchet sold in sets of 4.

Installing Hitch Bracket

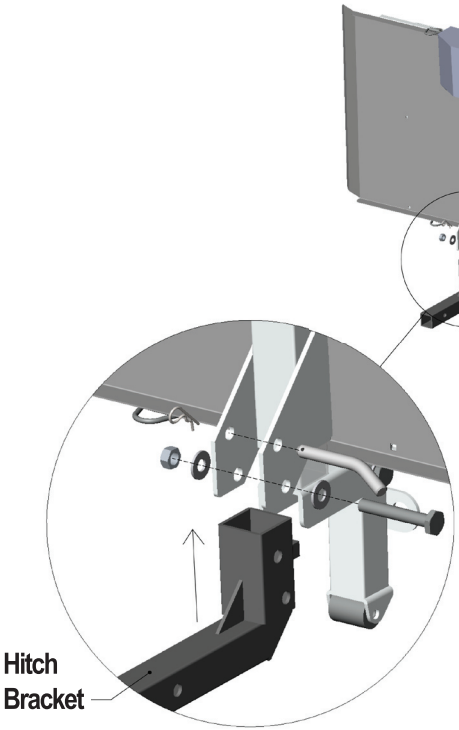

To attach hitch bracket, first place bracket between support plates and line up hole. Insert in the bottom hole a 5/8" x 4" hex bolt with washer and washer with lock nut on opposite side. When tightening down bolt allow for the bracket to rotate freely. Insert into top hole a hitch pin and cotter pin to secure it.

Tilting Instructions

To tilt platform from **Folded Position**, hold onto platform with one hand and remove hitch pin. Slowly lower platform to full **Tilted Position**. Repeat steps to replace back to **Folded Position**.

NEVER drive vehicle when platform is in **Tilted Position**.

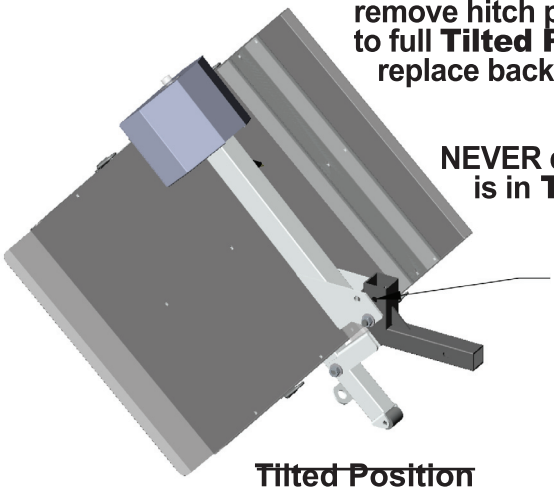

To tilt platform, remove hitch pin at this location.

Tilted Position

Prairie View Industries, Inc. ◆ P.O. Box 575 ◆ Fairbury, NE 68352-0575
Phone 800-554-7267 ◆ Fax 402-729-4058 ◆ Email: info@pviramps.com ◆ www.pviramps.com

Operating Instructions

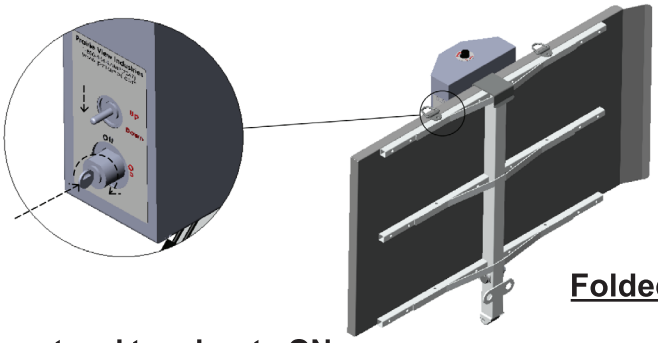

Folded Position

1. Insert and turn key to ON position. Press switch down to lower platform.

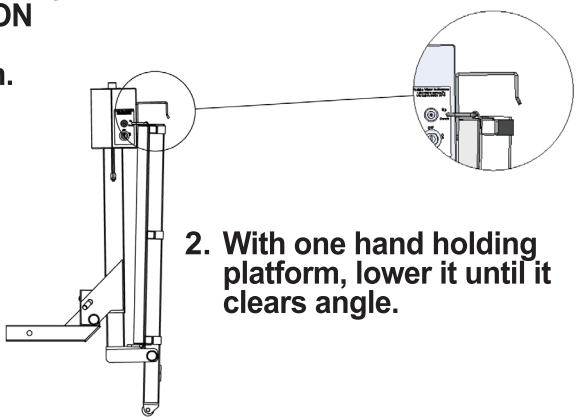

2. With one hand holding platform, lower it until it clears angle.

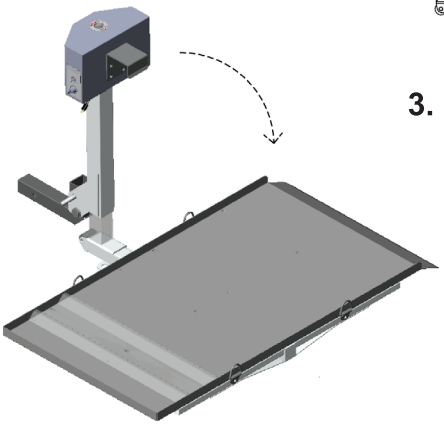

3. Rotate platform down. Make sure that feet and other objects are out from under platform. Continue lowering platform to the ground. Release the Up/ Down toggle switch just as the platform reaches the ground. DO NOT EXTEND PLATFORM FURTHER DOWN. Platform is now in **Loading Position**.

4. Load chair/scooter on platform. Secure chair/scooter down to platform with straps. Raise platform until motor starts making clicking noises. Platform is now in **Loaded Traveling Position**. Repeat steps for unloading and folding up platform.

Manual Crank

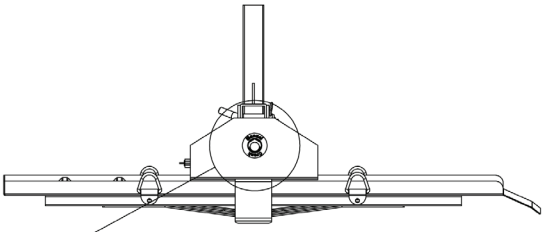

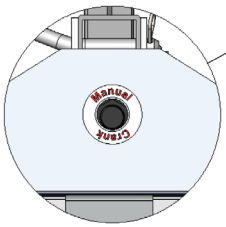

The MT1000 is equipped with a manual crank. If for any reason motor will not work, remove cap and with included wrench manually crank platform to proper Traveling or Folded Position.

Wiring The Vehicle

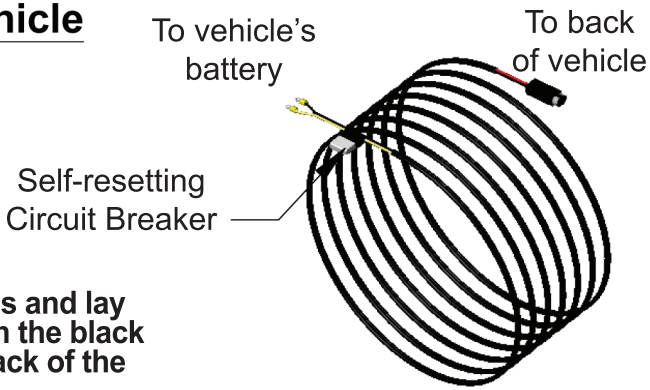

Step 1

Unwind the harness and lay it flat. The end with the black plug goes to the back of the vehicle.

Step 2

Begin laying out harness from front of vehicle. Attach only the black wire to the negative terminal on the battery. DO NOT ATTACH THE YELLOW WIRE.

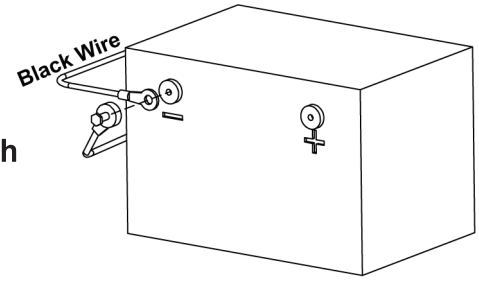

Prairie View Industries, Inc. ◆ P.O. Box 575 ◆ Fairbury, NE 68352-0575
Phone 800-554-7267 ◆ Fax 402-729-4058 ◆ Email: info@pviramps.com ◆ www.pviramps.com

Step 3

Next run the wiring to the back of the vehicle. Wiring can go through inside or under vehicle. Be sure when routing wiring to locate it where it cannot be snagged by road debris and away from gas tank. Also be sure wiring avoids sharp edges. Coil up any excess wiring and secure it to the vehicle. Zip ties work well for this. DO NOT CUT OR SHORTEN THE HARNESS.

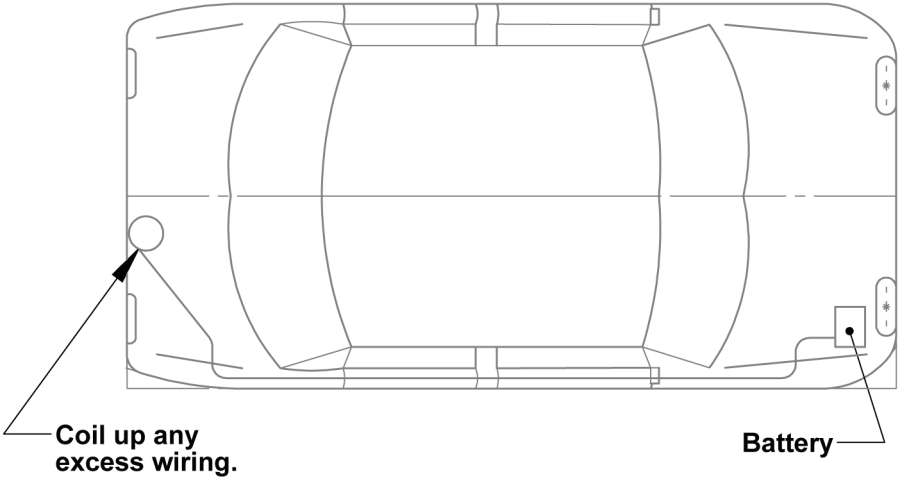

Step 4

Finally attach the yellow wire to the positive terminal on the battery.

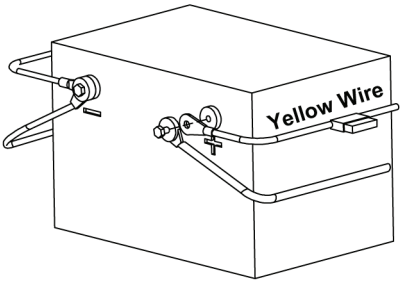

CAUTION: When routing wiring harness stay away from exhaust system, brake lines, fuel lines, gas tank, pinch points, and sharp edges. Do not allow wiring harness to hang down.

PRAIRIE VIEW INDUSTRIES, INC.

ONE YEAR LIMITED WARRANTY

1. PRAIRIE VIEW INDUSTRIES, INC. warrant that the equipment is free from defects in material and workmanship under normal use and service. The provisions of this warranty shall not apply to any equipment which has been subject to misuse, negligence, alteration, accident or improper installation, or which shall have been repaired outside PRAIRIE VIEW INDUSTRIES, INC. place of business. The provisions of this warranty shall not apply to normal deterioration due to wear and exposure.

2. PRAIRIE VIEW INDUSTRIES, INC. obligation under this warranty is limited to repairing or replacing, at its option, any equipment which is returned to PRAIRIE VIEW INDUSTRIES, INC. place of business and which upon examination shall disclose to PRAIRIE VIEW INDUSTRIES, INC. reasonable satisfaction to have been thus defective. The repair or replacement of defective equipment under this warranty will be made by PRAIRIE VIEW INDUSTRIES, INC. without charge for parts or labor. This excludes shipping or delivery charges to or from PRAIRIE VIEW INDUSTRIES, INC. place of business.

3. The warranty is effective as of the date of sale to the original purchaser and extends for one year. Original purchaser must fill out and return the warranty card within 30 days after the date of sale or the warranty will be void.

4. Defective equipment that is covered by this warranty must be returned at the purchaser's expense along with proof of date of purchase (receipt, check or other document that shows the date of purchase and the identity of the equipment) to PRAIRIE VIEW INDUSTRIES, INC., 2620 INDUSTRIAL DRIVE, Fairbury, NE 68352.

5. The duration of any implied warranty of merchantability or fitness for a particular purpose shall be limited in all respects to the duration of the limited warranty. This limited warranty shall be in lieu of any other express or implied warranty. Some states do not allow limitations on how long an implied warranty lasts, so the above limitation may not apply to you. PRAIRIE VIEW INDUSTRIES, INC. neither assumes nor authorizes any other person to assume for it any other liability in connection with PRAIRIE VIEW INDUSTRIES, INC. or the equipment.

6. The purchaser's sole and exclusive remedy against the seller shall be for the repair or replacement of defective equipment as provided above. No other remedy, including but not limited to, incidental or consequential damages for lost profits, lost sales, injury to property or any other incidental or consequential loss, shall be available to the purchaser. Some states do not allow the exclusion or limitation of incidental or consequential damages, so the above limitation or exclusion may not apply to you. Before using, user shall determine the suitability of the product for its intended use, and user assumes all risk and liability whatsoever in connection therewith.

7. This warranty gives you specific legal rights, and you may also have other rights which vary from state to state.

Prairie View Industries, Inc. ◆ P.O. Box 575 ◆ Fairbury, NE 68352-0575
Phone 800-554-7267 ◆ Fax 402-729-4058 ◆ Email: info@pviramps.com ◆ www.pviramps.com